Canon

FULL AUTO REF

R-F10

Operation Manual

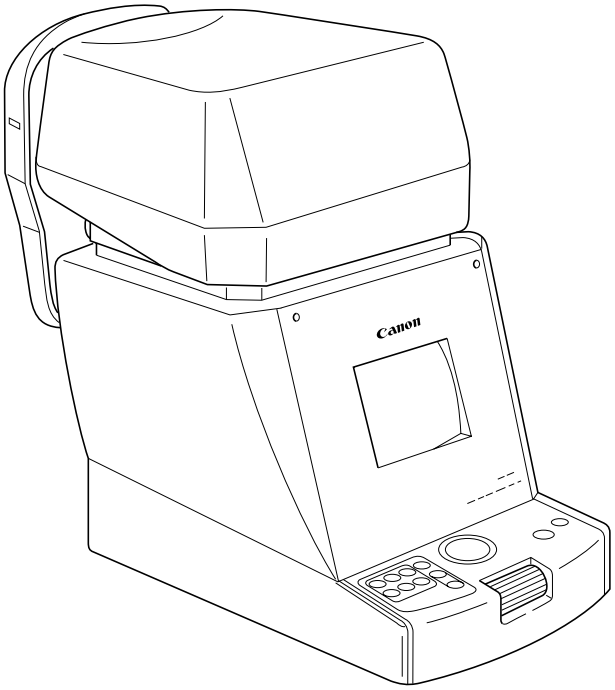

Before using the instrument, be sure to read this manual thoroughly.
Keep the manual in easy-to-access place.

PLEASE NOTE

1. The user is responsible for the use and maintenance of the product.
   We suggest that a member of the user's staff be designated as being in charge of maintenance so as to ensure that the product is kept in a safe and good condition.
   Also, medical products must be used only by a qualified person.

2. In no event will Canon be liable for direct or indirect consequential damage arising out of the use of this product.

3. This product may malfunction due to electromagnetic waves caused by portable personal telephones, transceivers, radio-controlled toys, etc.
   Be sure to avoid having objects such as these, which affect this product, brought near the product.

4. Canon reserves the right to change the specifications, configuration and appearance of the product without prior notice.

© CANON INC. 2004

All rights reserved.
Under copyright laws, this manual may not be copied, in whole or in part, without the written consent of Canon.

Safety Information

Regulations

For U. S. A.

This instrument is a CLASS I EQUIPMENT and TYPE B APPLIED PARTS according to UL2601-1.

MEDICAL ELECTRICAL EQUIPMENT
WITH RESPECT TO ELECTRIC SHOCK,
FIRE AND MECHANICAL HAZARDS
ONLY IN ACCORDANCE WITH UL2601-1
AND CAN/CSA C22.2 NO. 601.1
41C4

Do not make any changes or modifications to the equipment unless otherwise specified in the manual.
If such changes or modifications should be made, you could be required to stop operation of the equipment.

NOTE: This equipment has been tested and found to comply with the limits for a Class A digital device, pursuant to Part 15 of the FCC rules.
These limits are designed to provide reasonable protection against harmful interference when the equipment is operated in a commercial environment.
This equipment generates, uses, and can radiate radio frequency energy and, if not installed and used in accordance with the instruction manual, may cause harmful interference to radio communications.
Operation of this equipment in a residential area is likely to cause harmful interference in which case the user will be required to correct the interference at his own expense.

Use of shielded cable is required to comply with class A limits in Subpart B of Part 15 of FCC rules.

For Canada

This equipment complies with the Canadian ICES-003 class A specifications.

For EU Countries

This instrument is a Class I Equipment with measuring function.

This is a Group 1, Class B equipment according to EN55011.

The following mark shows compliance of the instrument with Directive 93/42/EEC.

CE 0197

Für Deutschland

Während des Betriebs liegt der Schalldruckpegel dieses Instruments bei 70 dB(A) oder weniger gemäß ISO 7779.

ISO15004

This report provides information about the hazard to the examinee's eyes in compliance with ISO15004 (1997).

1. The spectral characteristics of radiant flux exiting from this instrument are as follows:

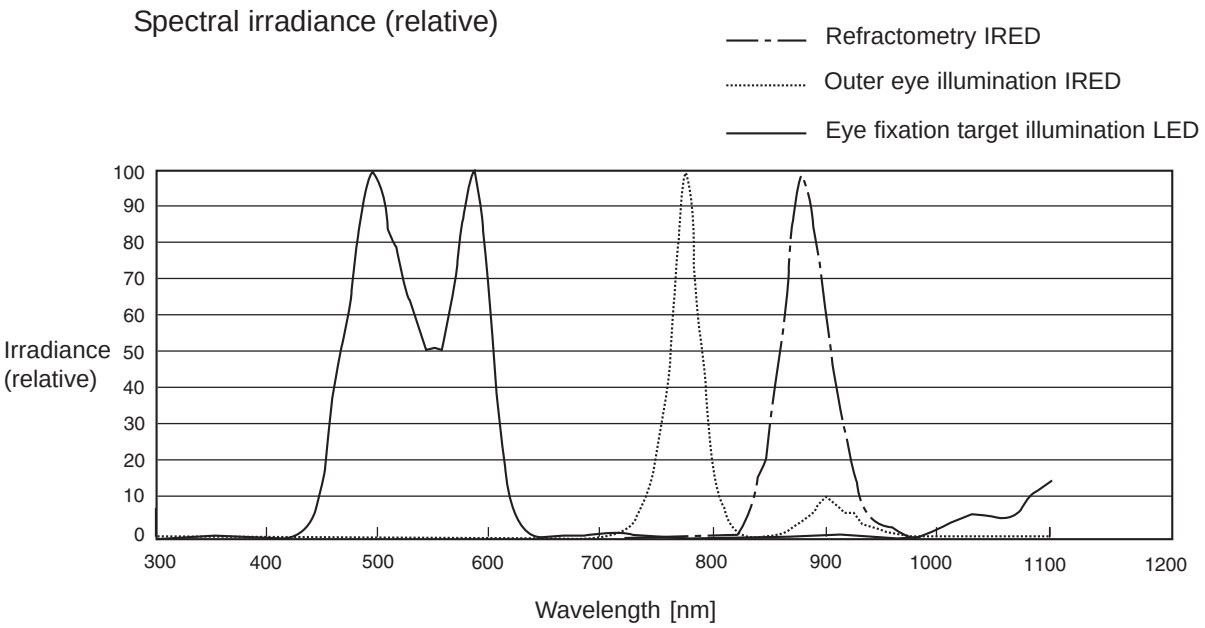

2. Photochemical radiance

The photochemical radiances of each light source irradiated from this instrument to the examinee's eyes are indicated below. All the values in the following table were measured when the instrument was operating at maximum light intensity and maximum aperture.

	La [mW/cm2/sr]	Lb [mW/cm2/sr]
(1) Refractometry IRED	0.0000	0.0000
(2) Outer eye illumination IRED	0.0578	0.0225
(3) Eye fixation target illumination LED	0.0099	0.0085

3. The above values are spectrally weighted radiance on the pupil of examinee's eyes in each wavelength.

La gives the measure for eyes in which the crystalline lens has been removed (aphakes) or for eyes of infants. Lb gives this measure for eyes in which the crystalline lens is in place except for infants'.

Spectrally weighted photochemical radiances La and Lb give a measure of the potential that exists for a beam of light to cause photochemical hazard to the retina.

According to "the American Conference of Governmental Industrial Hygienist (ACGIH) - Threshold Limit Values for Chemical Substances and Physical Agents (1995 - 1996 edition)", at photochemical radiances La and Lb of 80 [mW/cm2/sr], 3 minutes irradiation would cause the retinal exposure dose level to attain the recommended exposure limit.

If the value of radiance was 40 [mW/cm2/sr], 6 minutes would be needed to reach the recommended limit.
That is, the retinal exposure dose for a photochemical hazard is a product of the radiance and the exposure time.
Since La and Lb of this instrument are extremely low, the risk of the photochemical hazard is also very low. While no acute optical radiation hazards have been identified for this instrument, it is recommended that the intensity of light directed into the examinee's eye be limited to the minimum level which is necessary for diagnosis. Infants, aphakes and persons with diseased eyes will be at greater risk. The risk may also be increased if the person being examined has had any exposure with the same instrument or any other ophthalmic instrument using a visible light source during the previous 24h. This will apply particularly if the eye has been exposed to retinal photography.

General Safety Information

Follow the safety instructions in this manual and all warnings and cautions printed on the warning labels. Ignoring such cautions or warnings while handling the product may result in injury or accident.
Be sure to read and fully understand the manual before using this product.
Keep this manual for future reference.

Meaning of Caution Signs

⚠ WARNING	This indicates a potentially hazardous situation which, if not heeded, could result in death or serious injury to you or others.
⚠ CAUTION	This indicates hazardous situations which, if not heeded, may result in minor or moderate injury to you or others, or may result in machine damage.
NOTE	This is used to emphasize essential information. Be sure to read this information to avoid incorrect operation.

Installation and Environment of Use

⚠ WARNING	Do not install the instrument near any flammable chemicals such as alcohol, thinner, benzine, etc. If chemicals are spilled or evaporate, it may result in fire or electric shock through contact with electric parts inside the instrument. Also, some disinfectants are flammable. Be sure to take care when using them.
⚠ CAUTION	Do not install the instrument in a location with the conditions listed below. Otherwise, it may result in failure or malfunction, fall or cause fire or injury. - Close to facilities where water is used. - Where it will be exposed to direct sunlight. - Close to or on air-conditioner or ventilation equipment. - Close to or on heat source such as a heater. - Prone to vibration. - Insecure trolley or stand. - Dusty environment. - Saline or sulfurous environment. - High temperature or humidity. - Freezing or condensation.
⚠ CAUTION	Place the instrument on a firm table. Do not place it extremely near the edge of the table in order to avoid damage or injury due to falling.
⚠ CAUTION	Do not cover the vent holes on the cover. Otherwise, the temperature in the instrument will rise and may cause fire.

Installation Operation

⚠ WARNING	Do not connect the instrument with anything other than specified. Otherwise, it may result in fire or electric shock. Also, when other equipment is going to be connected to the instrument using the connector for interface, be sure to check after connection that leakage current is within the tolerable value. For details, please contact Canon representative or distributor.

Power Supply

⚠ WARNING	Only operate the instrument with the type of power supply indicated on the rating plate. Otherwise, it may result in fire or electric shock.
⚠ WARNING	Be sure to disconnect/connect the cables as indicated in this manual. The unit weighs 21 kg, so bear in mind that it may tip over if proper care is not taken. Also, do not handle the cables with wet hands. Otherwise, you may get an electric shock that may result in death or serious injury.
⚠ WARNING	Securely plug in the power cable into the AC outlet. If contact failure occurs, or if dust or metal object come in contact with the exposed metal prong of the plug, fire or electric shock may result.
⚠ WARNING	Be sure to hold the plug or connector to disconnect the cable. If you pull the cable, the core wire may be damaged, resulting in fire or electric shock.
⚠ WARNING	Do not cut or process the cables. Also, do not place anything heavy, including the instrument on it, step on it, pull it, bend it, or bundle it. Otherwise, the cable may be damaged, which may result in fire or electric shock.
⚠ WARNING	Do not get the power for more than one instrument from the same AC outlet. Otherwise, it may result in fire or electric shock.
⚠ CAUTION	The instrument is shipped with a grounding type (three-core) power cable. To reduce the risk of electric shock, always plug the cable into a grounded power outlet.
⚠ CAUTION	To make it easy to disconnect the plug at any time, avoid putting any obstacles near the outlet.

Handling

⚠ WARNING	Never disassemble or modify the product as it may result in fire or electric shock. Also, since the instrument incorporates high-voltage parts that may cause electric shocks and other hazardous parts, touching them may cause death or serious injury.
⚠ WARNING	Do not place anything on top of the instrument. Otherwise, the object may fall and cause injury. Also, if metal objects such as needle or clip falls into the instrument, or if liquid is spilled, it may result in fire or electric shock.
⚠ WARNING	When the instrument is going to be moved, be sure to move the measurement head to the center, turn OFF the power switch, unplug the power cable from the AC outlet, and disconnect other cables. Otherwise, the cable may be damaged, which may result in fire or electric shock. Also, when the instrument is going to be carried, support the bottom of the instrument and hold it horizontally. Do not hold it by the face rest or other parts as they may come off, resulting in injury.
⚠ WARNING	Do not hit or drop the instrument. The instrument may be damaged if it receives a strong jolt, which may result in fire or electric shock if the instrument is used without it being repaired.
⚠ CAUTION	Wipe the forehead rest with ethanol or glutaraldehyde solution to disinfect it each time a different examinee uses it, in order to prevent infection. Please consult a specialist for the procedure for disinfection.
⚠ CAUTION	Change the chin rest paper each time the examinee changes in order to keep the chin rest clean.
⚠ CAUTION	Do not have the examinee place his/her hand under the chin rest or near the measurement head. Otherwise, fingers may be hurt.
⚠ CAUTION	Be careful to avoid the measurement head hitting the examinee's face when moving it toward the examinee during alignment and focusing in manual measurement.
⚠ CAUTION	When the instrument is not going to be used, turn OFF the power switch. Also, unplug the power cable from the AC outlet when it is not going to be used for a long time.
⚠ CAUTION	This instrument incorporates a lithium battery, which may pollute the environment if the instrument is abandoned. Please ask a professional waste disposal company to handle disposal, or contact Canon representative or distributor before disposing of the instrument.

When Problem Occurs

⚠ WARNING	Should any of the following occur, immediately turn OFF the power switch, unplug the power cable from the AC outlet, and contact Canon representative or distributor. - When there is smoke, odd smell or abnormal sound. - When liquid has been spilled into the instrument or a metal object has entered through an opening. - When the product has been dropped and it is damaged.

Maintenance and Inspection

⚠ WARNING	For safety reasons, be sure to turn OFF the power switch when the inspections indicated in this manual are going to be performed. Otherwise, it may result in electric shock.
⚠ WARNING	When the instrument is going to be cleaned, be sure to turn OFF the power switch, and unplug the power cable from the AC outlet. Never use alcohol, benzine, thinner or any other flammable cleaning agents. Otherwise, fire or electric shock may result.
⚠ WARNING	Clean the plug of the power cable periodically by unplugging it from the AC outlet and removing dust or dirt from the plug, its periphery and AC outlet with a dry cloth. If the cable is kept plugged in for a long time in a dusty, humid or sooty place, dust around the plug will attract moisture, and this could cause insulation failure which could result in a fire.
⚠ WARNING	The instrument must be repaired by a qualified engineer only. If it is not repaired properly, it may cause fire, electric shock, or accident.
⚠ CAUTION	For safery reasons, be sure to inspect the instrument before using it.

Rating Plate and Warning Label

The R-F10 has a rating plate and a warning label on it.
Contents of those and the positions where they are attached are indicated below.

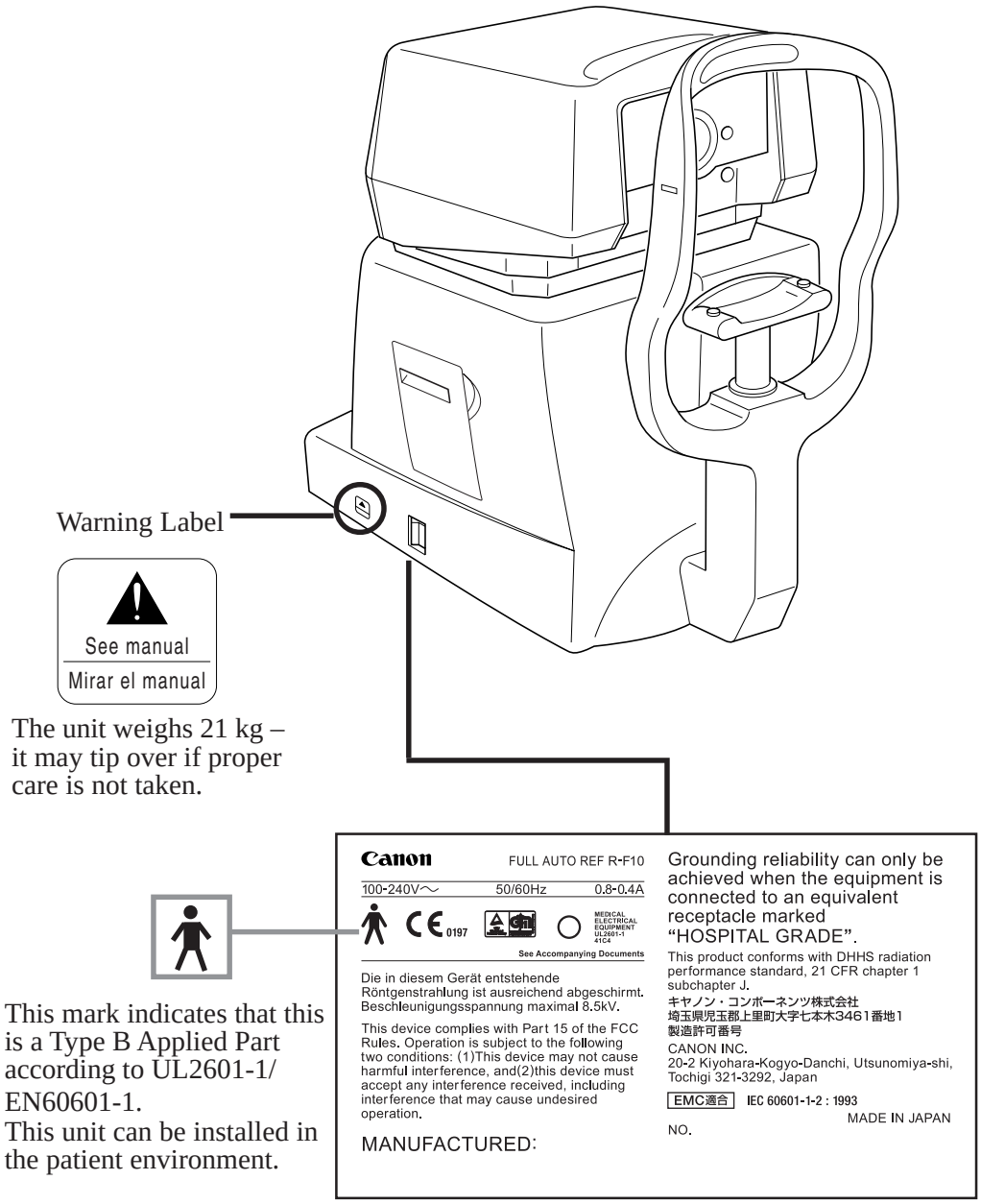

Raing Plate

Contents

Safety Information ..... (1)

1. Overview 1

2. Notes for Using the Instrument 2

3. Description 3
   3.1 Main Unit 3
   3.2 Connectors under the Main Unit 5
   3.3 Operation Panel 6

4. Measurements 9
   4.1 Preparation 9
   4.2 Measurement in FULL AUTO Mode 12
   4.3 Measurement in MANUAL Mode 19

5. Measurements Stored in Memory [DISPLAY Mode] 23

6. Various Settings [SET Mode] 24
   6.1 Settings for Measurement (Page: 1/3) 25
      6.1.1 Basic Operation 25
      6.1.2 Items 25
   6.2 Settings for Printing and Transfer (Page: 2/3) 28
      6.2.1 Basic Operation 28
      6.2.2 Items 29
   6.3 Entering Message for Internal Printer (Page: 3/3) 31
      6.3.1 About the Display 31
      6.3.2 How to Enter the Characters 32
      6.3.3 How to Insert 32
      6.3.4 How to Delete 33

7. Daily Inspection and Maintenance 35
7.1 Inspection 35
7.1.1 Before Turning ON the Power 36
7.1.2 After Turning ON the Power 37
7.2 Before Calling a Service Person 38
7.2.1 If Problems Such as Following Occur 38
7.2.2 If Message Such as Following Appears on the Monitor 39
7.3 Cleaning and Disinfection 43
7.3.1 Protective Glass in Measurement Window 43
7.3.2 Forehead Rest 44
7.3.3 Cover, Monitor and Roller 44
7.3.4 Trackball 45
7.4 Replacement 46
7.4.1 Chin Rest Paper 46
7.4.2 Printing Paper 47
7.5 Expendable Parts List 49

8. Installation 50
8.1 Installation 50
8.2 Precautions when Moving the Instrument 52

9. Service Information 53

10. Specifications 54

11. Components 55

1. Overview

The Canon Full Auto Ref *R-F10* is for performing refractometry.

The main feature of the R-F10 is that by just displaying the examinee's eye somewhere on the monitor and pressing the START switch, the instrument then automatically performs a precise alignment and measurement by a three-dimensional tracking system.
Furthermore, the instrument will also measure the other eye and print out the results for both eyes. Thus, full measurement can be done very easily in a short time.

Also, because the observation range of examinee's eye on the monitor has been widened and the depth of focus is deep, it is easier to check the position of the eye or whether eyelashes are covering the pupil.

2. Notes for Using the Instrument

Before Use

(1) Sudden heating of the room in cold areas will cause condensation to form on the protective glass in the measurement window and on optical parts inside the instrument. In this case, wait until condensation disappears before performing measurement.

During Measurement

(1) Do not stain the protective glass in the measurement window with fingerprints, etc. Otherwise, you may not be able to obtain a correct measurement.
(2) It is recommended that a hard copy of the printout be made if you wish to store it for a long time, because printouts on thermal paper are apt to deteriorate.

After Use

(1) Turn OFF the power and place the dust cover over the instrument.

During Cleaning and Disinfection

(1) If the surface of the protective glass is wiped when dust or dirt is on it, it will be scratched. Also, do not wipe the protective glass with ethyl alcohol or with cleaning paper containing silicone.
Otherwise, the surface will be corroded, or will be stained. → Section 7.3.1
(2) Do not use alcohol, benzine or thinner for cleaning the cover of the instrument.
Also, never wipe the cover with ethanol or glutaraldehyde solution.
Otherwise, the coating will be corroded. → Section 7.3.3

During Installation

(1) Handle the instrument carefully, as preadjustment may be altered if the instrument receives a strong jolt.
(2) Do not install the instrument where it will be exposed to direct sunlight.
Otherwise, it will be hard to see the monitor properly, or you may not be able to obtain a correct measurement.
(3) Blow off the dust in the connectors of the cables with a blower before connecting them. Otherwise, connection failure may occur.
(4) When the instrument is going to be transported, it must be protected against vibration and shocks. Contact Canon representative or distributor for advice on the procedure for packing it.
(5) Do not lay the instrument on its side when the power is turned ON. Otherwise, the instrument will malfunction.

3. Description

3.1 Main Unit

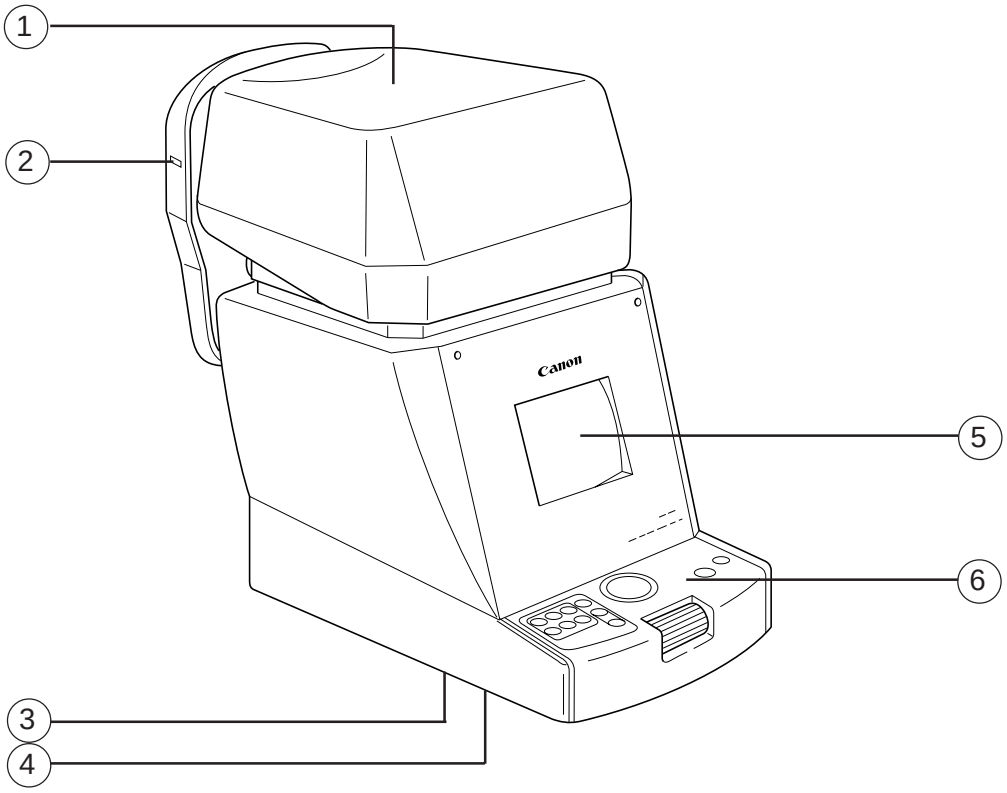

① Measurement Head
Unit that performs measurement.

② Height Adjustment Mark
Align the height of the examinee's eye with this mark by adjusting the height of chin rest.

③ Contrast Adjuster
Adjusts contrast of monitor.

④ Brightness Adjuster
Adjusts brightness of monitor.

⑤ Monitor
Monitor that displays the screen for measurements and various settings.

⑥ Operation Panel
See section 3.3.

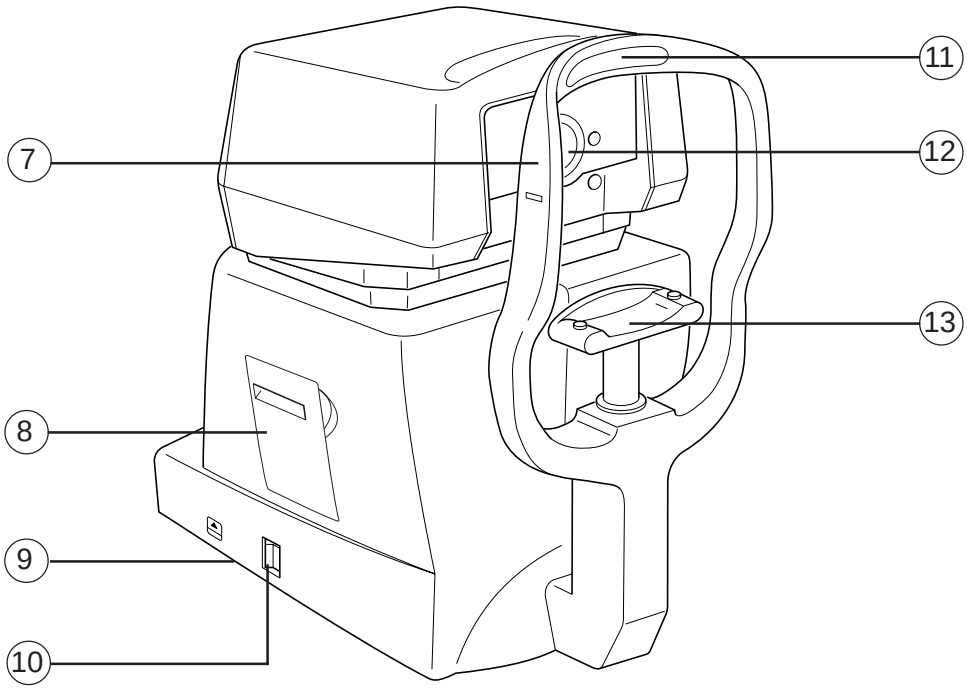

⑦ Face Rest
Place the examinee's face against this rest.

⑧ Printer
Prints measurements.

⑨ Rating Plate
Name of the product, rated voltage, serial number, etc. are indicated on this plate.

⑩ Power Switch
Switch for turning power ON and OFF.

⑪ Forehead Rest
Place the examinee's forehead against this rest.

⑫ Measurement Window
Window for the examinee to look into for measurement.

⑬ Chin Rest
Place the examinee's chin on this rest.

3.2 Connectors under the Main Unit

NOTE: Do not remove the cover for the RS232C connector.
Please contact Canon representative or distributor when connecting any instrument to the R-F10.

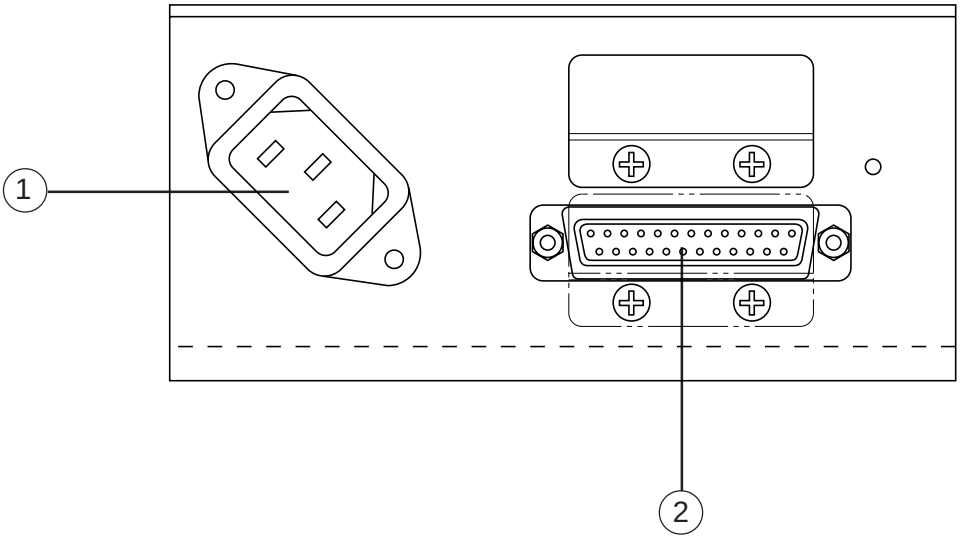

① Power Supply Connector
Connector for the power supply cable.

② RS232C Connector
RS232C connector for connecting instruments such as autophoropters.
The instrument must comply with the IEC60601-1 standard.

3.3 Operation Panel

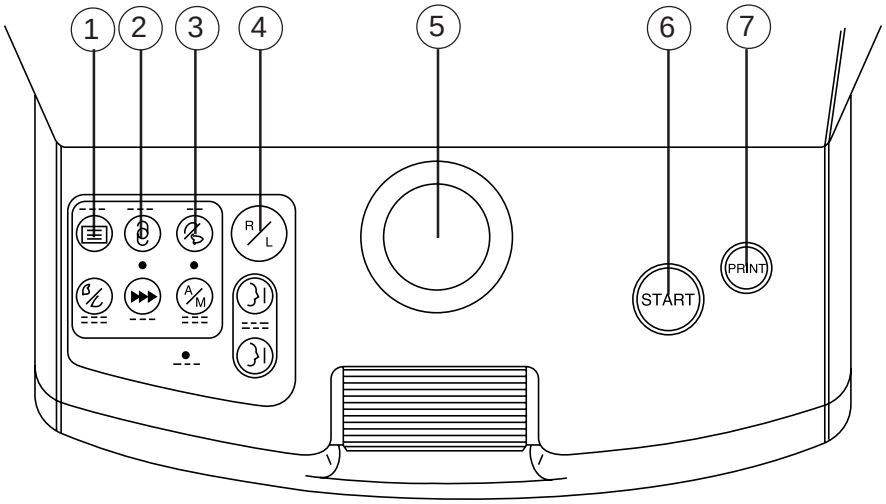

① DISP Switch
Press this switch in order to enter DISPLAY mode, where you can see measurement data stored in memory.

② IOL Switch
Press this switch when the examinee's eye is difficult to measure due to cataract or for examinee with intraocular lens (IOL). Lamp on the switch lights when the switch is ON.

③ VD Switch
Vertex distance switches between 12.0 mm or 13.5 mm (for glasses) and 0 mm (for contact lenses).

④ R/L Switch
Each time the switch is pressed, the measurement head moves either to the right or left eye.

⑤ Trackball
Moves the measurement head up and down, right and left.

⑥ START Switch
When this switch is pressed in automatic measurement mode, automatic alignment and measurement are performed. In manual measurement mode, only measurement is performed.

⑦ PRINT Switch
Press this switch in order to print or transfer the measurement.

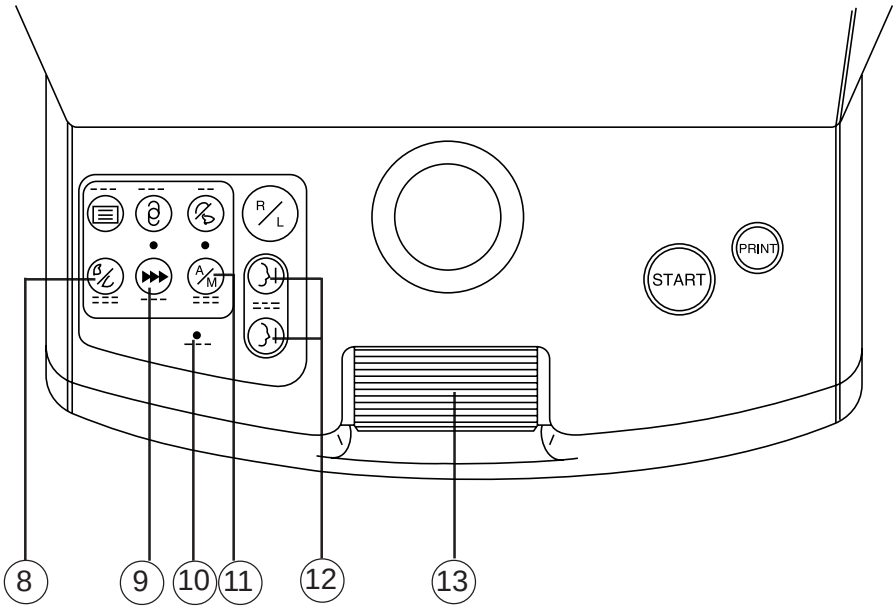

⑧ SET Switch
Press this switch in order to enter SET mode, where you can perform various settings concerning measurements.

⑨ MANU. Switch
Press this switch in order to perform manual measurement.

⑩ READY Lamp
It is constantly lit when the instrument is ready for measurement, and blinks during initial checks and when power-saving system is operating.

⑪ AUTO Switch
Press this switch in order to perform fully automatic measurement.

⑫ CHIN REST Switches
For raising/lowering the chin rest.

⑬ Roller
Moves the measurement head back and forth.

In DISPLAY and SET modes, a diagram showing the switches and their functions for the operation will be displayed on the lower part of the monitor, because the functions differ from that seen in the display of the switches.
The diagram corresponds to the switches on the operation panel as follows:

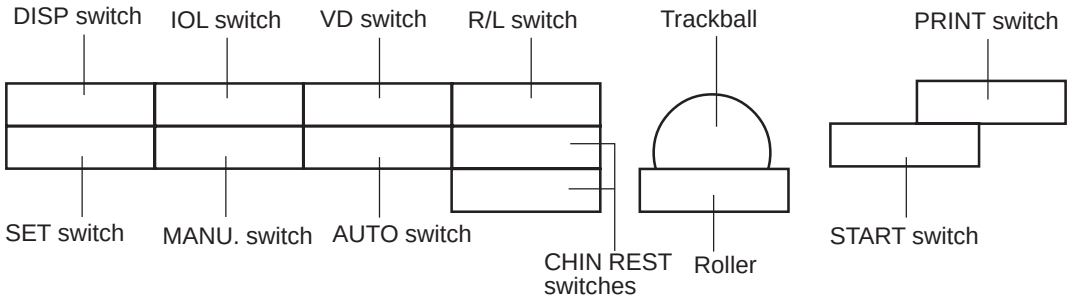

4. Measurements

⚠ WARNING	Should any of the following occur, immediately turn OFF the power switch, unplug the power cable from the AC outlet, and contact Canon representative or distributor. - When there is smoke, odd odor or abnormal sound. - When liquid has been spilled into the instrument or a metal objects has entered through an opening. - When the product has been dropped or its housing damaged.

When any operation has been interrupted for more than 3 minutes with the power turned ON, power-saving system of the R-F10 operates. Buzzer sounds when the instrument is entering or going out of this mode, and READY lamp blinks while this system is operating. Press any one of the switches in order to restore the function.

4.1 Preparation

Preparation is basically the same for measurements both in FULL AUTO and MANUAL modes.

1 Turn ON the power

Initial checks inside the instrument start automatically.

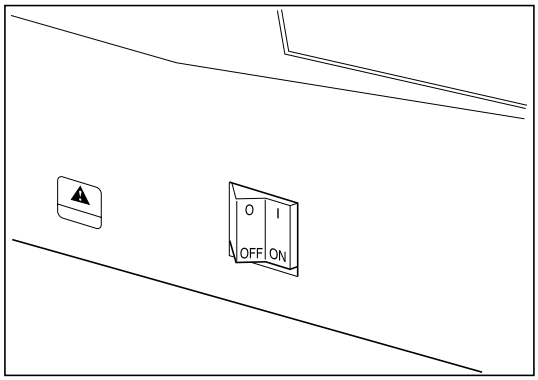

When the checks are completed, FULL AUTO mode will be selected and the measurement head will move and stop at the right eye side.

NOTE: Because the measurement head moves during initialization, do not have the examinee place his/her face on the chin rest until the initialization is completed.

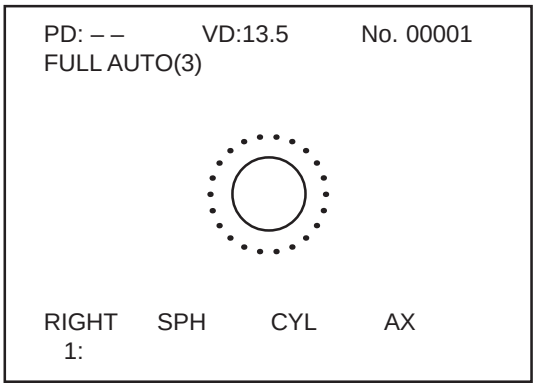

2 Check the settings

Check and change the settings concerning measurement and printing as required (→ sections 6.1 – 6.2).
If you want to print a message with the result, enter it (→ sections 6.3).

Vertex distance can be selected by pressing the **VD** switch.
Each time the switch is pressed, vertex distance changes (12.0 or 13.5, whichever is selected in SET mode → 0.0 →12.0/13.5 → 0.0...), and result changes accordingly.

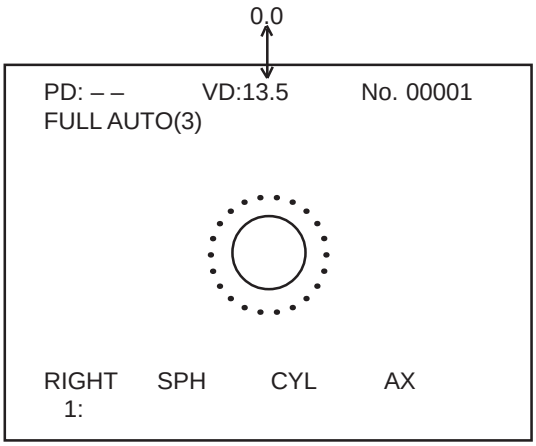

3 Adjust the height of the examinee's eye

⚠CAUTION	Ensure that the examinee has not placed his/her hand or fingers under the chin rest. Otherwise, fingers may be hurt.
⚠CAUTION	Wipe the forehead rest with ethanol or glutaraldehyde solution to disinfect it each time a different examinee uses it, in order to prevent infection. Please consult a specialist for the procedure for disinfection. If you are using disinfectant other than those specified above, or if you are mixing another disinfectant with ethanol, please also consult a specialist, because they may harm the forehead rest.
⚠CAUTION	Change the chin rest paper each time the examinee changes in order to keep the chin rest clean.

(1) Have the examinee sit and place his/her chin and forehead against the chin rest and forehead rest.

(2) Adjust the height of the chin rest by pressing **CHIN REST** switches so that the eye of the examinee is aligned with the height adjustment mark on the face rest.

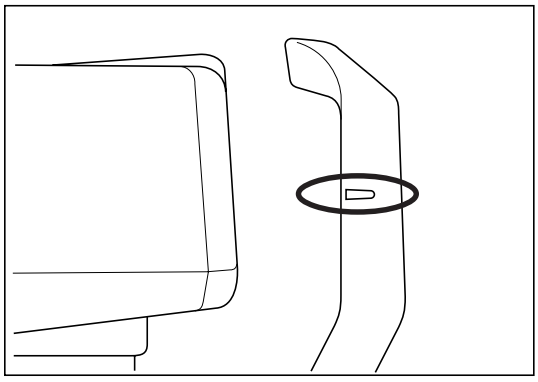

4.2 Measurement in FULL AUTO Mode

There are two modes of performing measurement; ***FULL AUTO*** and ***MANUAL***.

FULL AUTO mode is selected automatically when the power is turned ON or when the PRINT switch is pressed.
The examiner can also choose FULL AUTO mode with the AUTO switch.

After displaying the examinee's eye on the monitor, the examiner presses the START switch. The instrument will then automatically perform the alignment, focusing and measurement.
It is also possible to have the instrument automatically measure the left eye successively after measuring the right eye, and then print out the results.
In order to use the fully automatic function, set the options in SET mode (→ sections 6.1 and 6.2) as follows:
"PRINT: ON"
"R–L MEASURE: ON"
"AUTO PRINT: ON"

Select MANUAL mode with the MANU. switch when the pupil is eccentric, or when measuring a certain examinee is apt to result in error.
See section 4.3 for the procedure for manual measurement.

1 Check that automatic measurement has been chosen

If the words “FULL AUTO” is not displayed on the monitor, press **AUTO** switch.

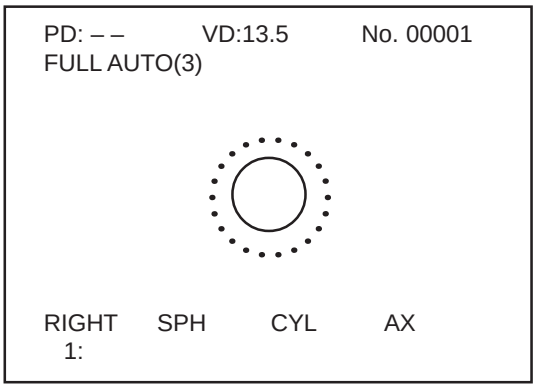

2 Check that the examinee’s eye is displayed on the monitor

If you cannot see it at all, adjust the position of the measurement head using the trackball.

Measurement head moves to right and left when trackball is turned to right and left.
Measurement head moves up and down when it is turned back and forth.

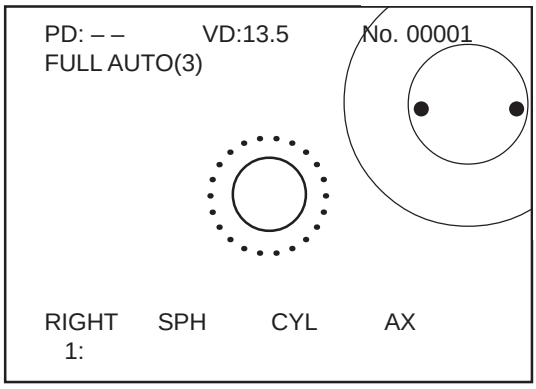

3 Have the examinee look at the eye fixation target

Have the examinee look at the red roof in the center of the scene shown.

4 Start automatic measurement

Press the **START** switch.
Measurement head moves automatically to perform alignment.

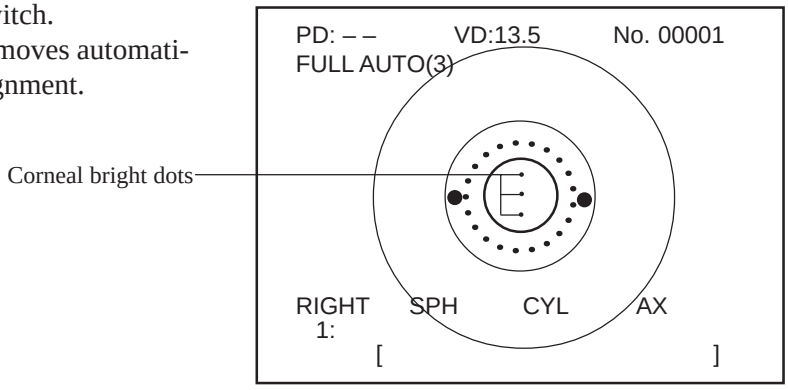

When a warning message “[1] EYE CANNOT BE FOUND PRESS START SW AGAIN” is displayed, or when alignment does not end

When automatic alignment cannot be performed within a specific time, the measurement head stops moving and a warning message “[1] EYE CANNOT BE FOUND PRESS START SW AGAIN” will be displayed. Also, in some cases, alignment does not end depending on the condition of examinee’s eye.
In this case, take the measures indicated below according to the cause.

[Cause 1] The position of examinee’s eye is off the automatic alignment range.
[Remedy 1] Move the position of the examinee’s eye displayed on the monitor toward the center a little more using the roller and trackball. Then, press the **START** switch. Adjust the height of the examinee’s eye with the height of the chin rest as required.

[Cause 2] Examinee’s eye is moving restlessly due to nystagmus, etc.
[Remedy 2] Have him/her look at the eye fixation target and press the **START** switch again.
If the eye is moving due to causes such as nystagmus, perform compulsory measurement by pressing the **START** switch during automatic alignment (see below), or perform continuous manual measurement by pressing the **START** switch for about 2 seconds (→ next page).

– Compulsory measurement –
In compulsory measurement, each time the **START** switch is pressed, measurement is performed once.

NOTE: Measurement error will occur unless the positioning is correct.

– Continuous manual measurement –

When **START** switch is pressed for about two seconds after the message is displayed, continuous measurements will start.
Perform alignment manually using the roller and trackball after the measurement is started, referring to section 4.3.
Measurement will be performed until 10 measurements are obtained.
After the measurement is over, the instrument will automatically return to FULL AUTO mode.
Continuous measurement can be cancelled by touching any switch other than roller or trackball during continuous measurement.

Continuous measurement can also be started by pressing the **START** switch for about two seconds after message [2], [3], [4] or [10] (→ section 7.2.2) is displayed.

[Cause 3] The pupil is obscured by eyelashes or eyelid.
[Remedy 3] Instruct the examinee to keep his/her eye open wide until measurement ends, or help them open the eye widely by lifting up the upper eyelid lightly with your fingers. Then, press the **START** switch again.

[Cause 4] Effect of light reflected from the surface of IOL (intraocular lens) .
[Remedy 4] Display the corneal bright dots near the center using trackball and roller. Then, press the **START** switch again.

[Cause 5] There is problem in surface of examinee's cornea.
[Remedy 5] Perform compulsory measurement (→ Remedy 2), or perform continuous manual measurement (→ Remedy 2).

[Cause 6] Effect of artificial light or sunlight reflected from the examinee's eye.
[Remedy 6] Do not expose the examinee's eye directly to bright artificial light or sunlight.

If the alignment still cannot be performed, message "[3] EYE CANNOT BE FOUND TRY IN MANUAL MODE" will be displayed. In this case, perform continuous manual measurement by pressing the **START** switch for about two seconds, or perform measurement in MANUAL mode by referring to section 4.3.

5 After the alignment, measurement is performed automatically

Measurement is performed as many times as selected in the SET mode (→ section 6.1).

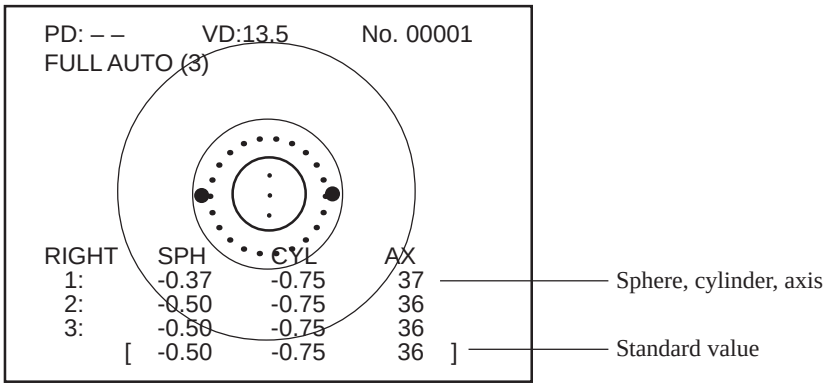

Maximum of three measurements will be displayed on the monitor.
If measurement is made more than three times, standard value* will be calculated.
Data in memory (maximum of 10 measurements) and standard value can be seen in DISPLAY mode.

NOTES: 1. *When "[2]/[4] MEASUREMENT ERROR" appears on the monitor, press the START switch for about two seconds if you wish to perform continuous manual measurement (→ Remedy 2 on the previous page). After the measurements are completed, the instrument will automatically return to FULL AUTO mode.*
2. *If "ERROR" appears on the monitor, refer to section 7.2.2.*
3. *If refractometry is apt to result in an error, turn ON the IOL switch**.*

* Standard value

When there is only one piece of data:	That data will be displayed.
When there are two pieces of data:	The newest reliable data will be displayed. If there is no reliable data, the newest data will be displayed.
When there are more than three pieces of data:	If there are three or more reliable data, the value calculated will be displayed. If there are two reliable data, the newest reliable data will be displayed. If there is only one reliable data, the data will be displayed. If there is no reliable data, the newest data will be displayed.

** IOL switch

If refractometry is apt to result in an error due to the following causes, measure the eye with the **IOL** switch turned ON:
(1) Effect of light reflected from the surface of IOL
(2) Unclear crystalline lens, i.e. cataract
(3) Diameter of examinee's pupil is small, i.e. insufficient dilation
When **IOL** switch is turned ON, the lamp on the switch turns ON.
After the measurement, "I" mark will be displayed after "AX".

NOTES: 1. *If measurement is made after switching the IOL switch ON/OFF, the previous data will be erased.*
2. *There may be some aberration to the measurement value due to deformation of cornea after surgery.*
3. *Reliability of the measurement with IOL switch turned ON may be low.*

6 Move measurement head toward the other eye

If “R–L MEASURE” is set to “ON” in SET mode (→ section 6.1), the measurement head automatically moves to the other eye.
If the setting is “OFF”, press the **R/L** switch.

7 Alignment and measurement of the other eye are performed

Alignment and measurement are performed automatically in the same way as measuring the right eye is done when the pupil of the left eye has been detected.

After both eyes are measured, pupil distance (PD) will be displayed.

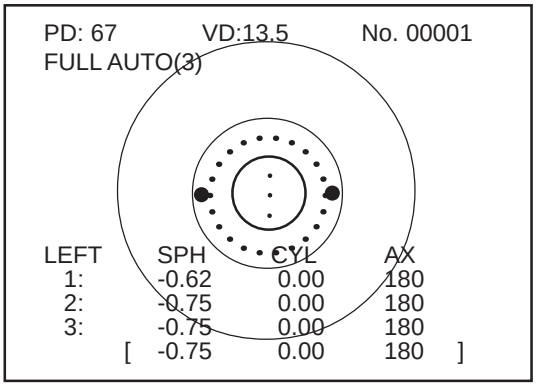

8 The result is printed out

If “PRINT” and “AUTO PRINT” are set to “ON” in SET mode (→ section 6.1), the result will be printed out automatically after both eyes are measured.
If the setting is “OFF”, press **PRINT** switch.

– Result will disappear from the monitor. However, it is saved in memory and can be referred to on the DISPLAY mode screen and/or can be printed out again until the next measurement is performed.

– If “TRANS” is set to “ON”(→ section 6.2):
Measurement data will be transferred to external instrument.

– If “COUNT” is set to “ON”(→ section 6.1):
Serial number will count up after data is printed/transferred.

NOTES: 1. Results will be deleted from memory at the measurement after printing/ transfer is performed.
2. It is recommended that a hard copy of the printout be made if you wish to store it for a long time, because printouts on thermal paper are apt to deteriorate.

Example of Printout

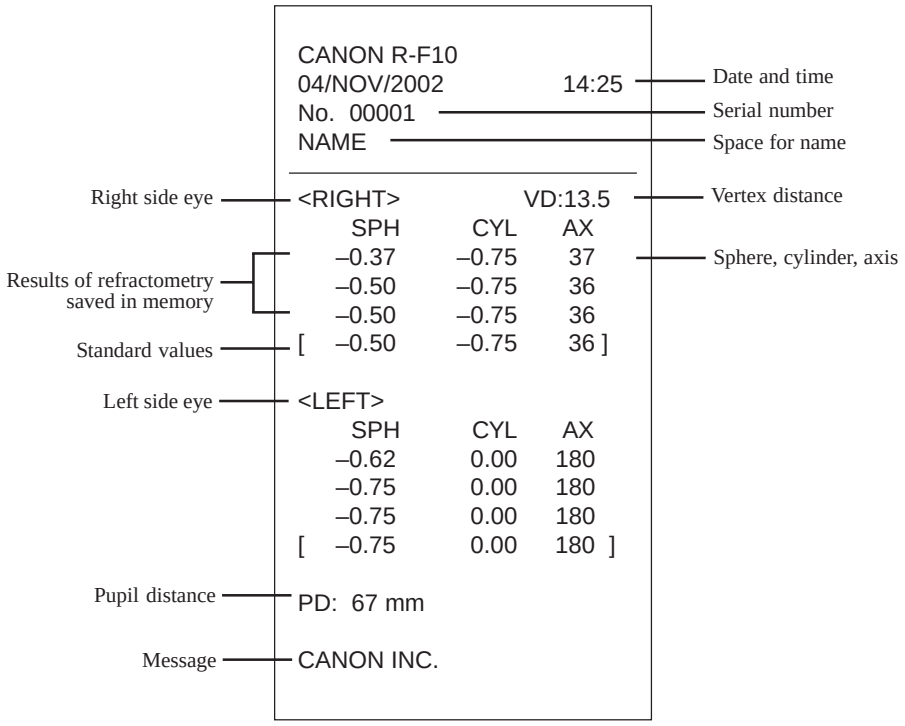

9 Measurement head returns to initial position

When printing is completed, the measurement head returns to its initial position and waits for the next measurement.

4.3 Measurement in MANUAL Mode

Perform measurement in MANUAL mode when the pupil is eccentric, or when measuring a certain examinee is apt to result in error.

NOTE: Be sure to perform focusing precisely in manual measurement. Otherwise, measurement error may occur.

1 Choose manual measurement

Press **MANU.** switch to display the word “MANUAL” on the monitor.

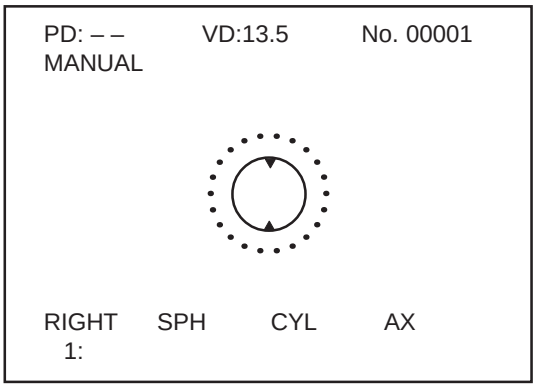

2 Display the examinee’s right eye on the monitor

Use the roller and the trackball so that the right eye of the examinee is seen approximately in the center of the monitor.

Measurement head moves back and forth when the roller is turned.
It moves up and down when trackball is turned back and forth, and to right and left when trackball is turned to right and left.

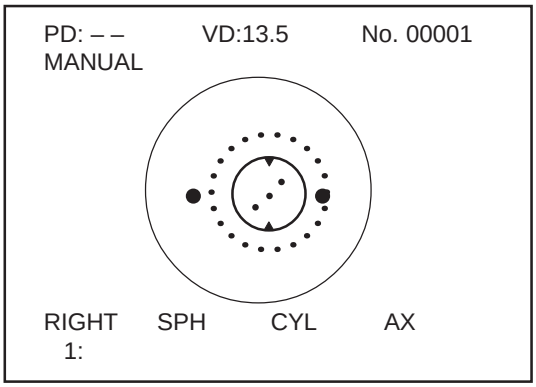

3 Have the examinee look at the eye fixation target

Have the examinee look at the red roof in the center of the scene shown.

4 Check that the alignment ring is not covered by eyelashes

Looking at the monitor, check that the inner alignment ring (see the illustration in step 5 below) is not covered by eyelashes. If they are covering the ring, instruct the examinee to keep his/her eye opened wide until measurement ends, or help them open the eye wider by lifting up his/her upper eyelid lightly with your fingers.

5 Perform alignment

⚠ CAUTION	Be careful to avoid the measurement head hitting the examinee's face when moving it toward the examinee during alignment in manual measurement.

Use the trackball to align the pupil and the inner alignment ring, and position the corneal bright dots inside the inner alignment ring.
If you cannot see the dots clearly, turn the roller back and forth until you can do so.

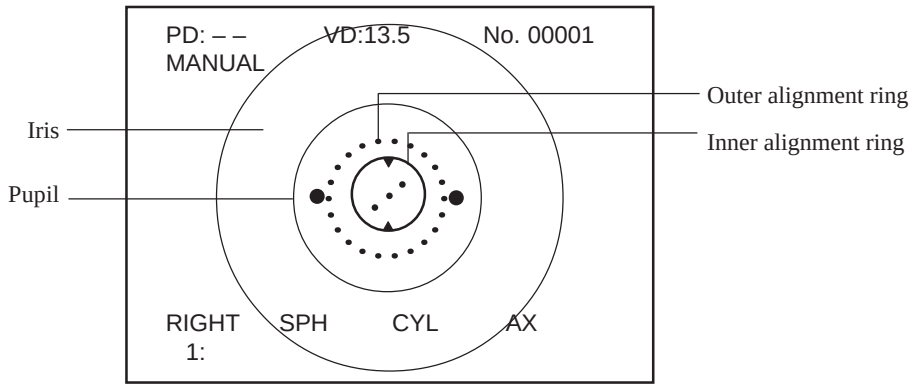

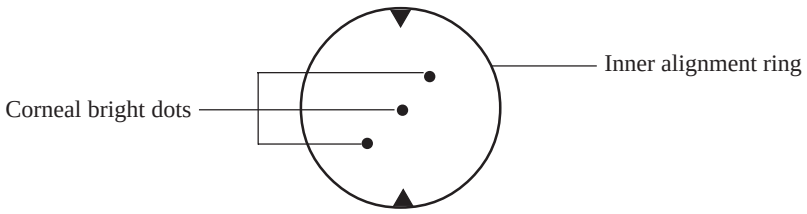

6 Perform focusing

⚠ CAUTION	Be careful to avoid the measurement head hitting the examinee's face when moving it toward the examinee during focusing in manual measurement.

Turn the roller back and forth to position the three bright dots vertically between the vertical alignment marks.

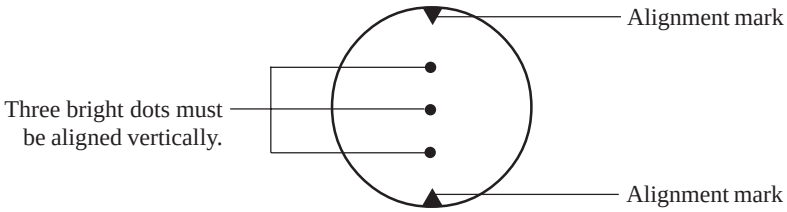

7 Measure the eye

After ensuring that the positioning and focusing are as required, press the **START** switch.

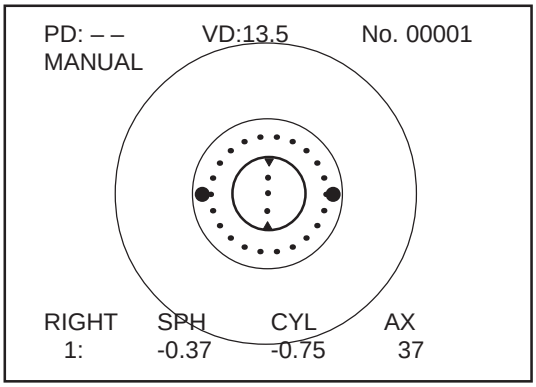

[Continuous manual measurement]

When the **START** switch is pressed for about two seconds, the display on the monitor will change from “MANUAL” to “MANUAL (C)”, and measurement will be performed until 10 measurements are obtained. Perform alignment again as required after the measurement is started.

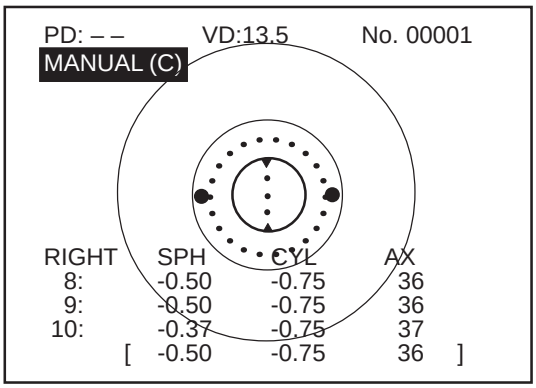

Measurement can be cancelled by touching any switch other than roller or trackball during continuous measurement.

8 Measure the other eye

Press the **R/L** switch to move the measurement head to the other side. Measure the left eye in the same way as measuring the right eye.

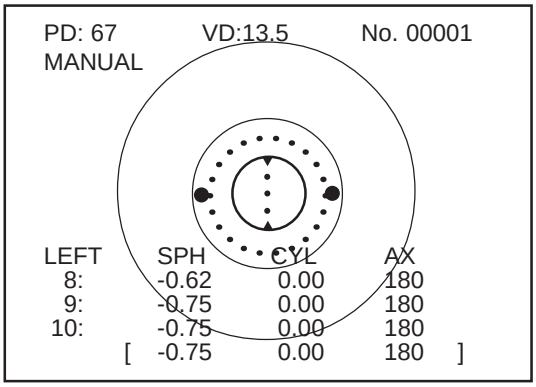

9 Print/transfer the result

Press the **PRINT** switch.

NOTES:
1. *Results will be deleted from memory at the measurement after printing/transfer is performed.*
2. *It is recommended that a hard copy of the printout be made if you wish to store it for a long time, because printouts on thermal paper are apt to deteriorate.*

5. Measurements Stored in Memory [DISPLAY Mode]

In DISPLAY mode, you can see the results (maximum of 10 data for each eye) of measurements stored in memory.
Press **DISP** switch in order to enter DISPLAY mode.
Press it again to go out.

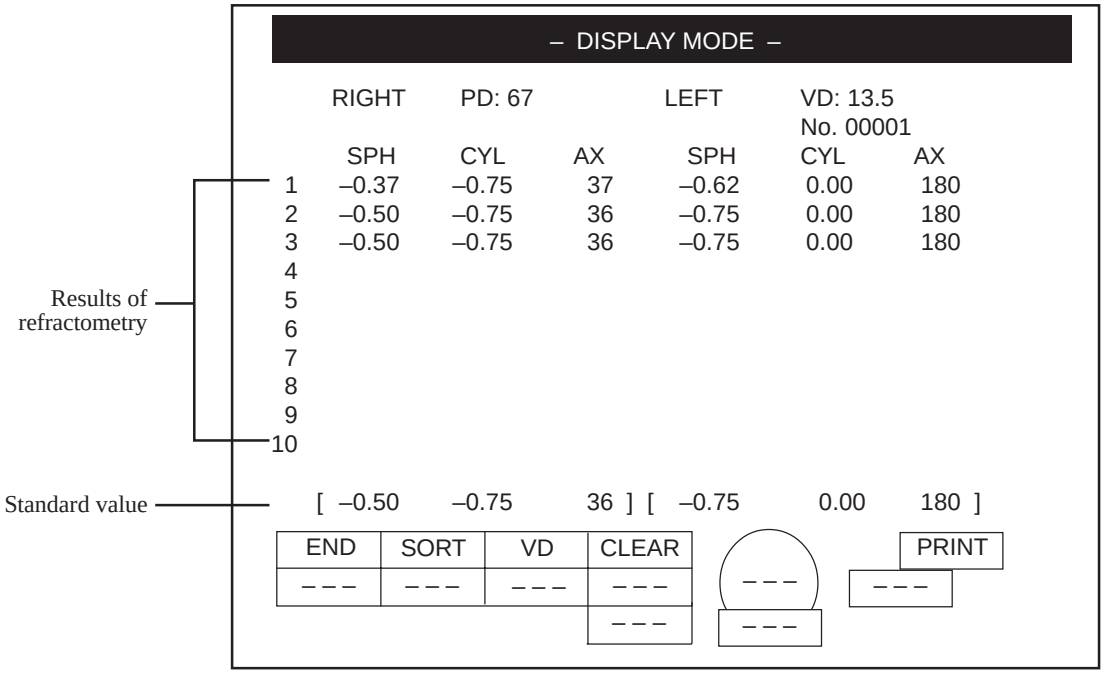

[How to change the order of refraction]

Press **IOL** switch.
The order of data will change starting from larger number of SPH with + sign (i.e. from stronger hyperopia) and ending with larger number with - sign (i.e. stronger myopia).
Press **IOL** switch again in order to return to the original order.

[[How to change vertex distance]

Press **VD** switch.

[[How to print the data in the condition displayed]

Press **PRINT** switch.

[How to delete all data]

NOTE: When data are deleted from DISPLAY Mode, they will also be deleted from the measurement mode.

Press **R/L** switch. Confirmation meassage will appear.
Press **START** switch to delete, or **PRINT** switch to cancel.

6. Various Settings [SET Mode]

Various settings concerning measurement, printing and data transfer can be performed in the SET mode.
There are three pages in the SET mode.

• Page 1/3: Display to set items concerning measurement.
• Page 2/3: Display to set items concerning printing and transfer.
• Page 3/3: Display to enter message to be printed with the R-F10 printer.

Settings are stored and remain even after power is turned OFF.

How to Enter SET Mode

1 Enter SET mode

In measurement mode, press **SET** switch.

2 To change the page

To display the next page, press **AUTO** switch.
To display the previous page, press **MANU.** switch.

3 To go out of SET mode

Press **SET** switch. You will return to the measurement mode immediately before entering the SET mode.

6.1 Settings for Measurement (Page: 1/3)

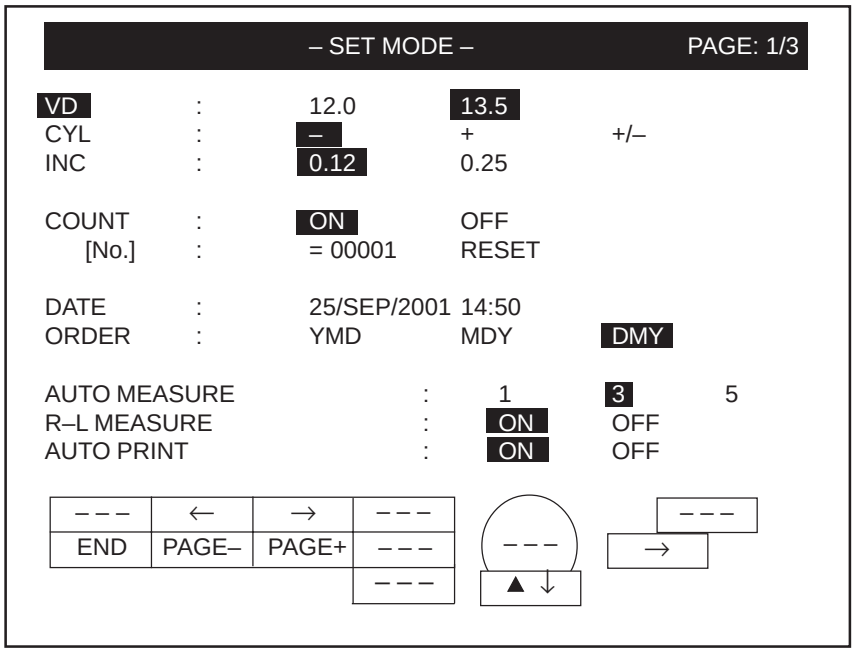

6.1.1 Basic Operation

[How to Select the Item]

Turn the roller to select the item to be changed.
The selected item will be displayed in reverse image.

[How to Change the Setting]

Press either **IOL** switch, **VD** switch, **START** switch or **PRINT** switch.
The selected setting will be highlighted.

NOTE: Some settings must be changed in a different ways. The procedure for changing those settings will be indicated under the explanation of each item.

6.1.2 Items

VD	Vertex distance “12.0, 13.5” Each time VD switch is pressed in measurement mode and DISPLAY mode, vertex distance selected here and 0.0 mm will switch over on the display, and the result will be converted accordingly.
CYL	Cylinder form “–, +, +/-”

INC — Increment of sphere and cylinder “0.12, 0.25”

COUNT — Whether to display and print the serial number
“ON”: Serial number will be displayed on the monitor and printed with the result. It counts up at the measurement after the print.
“OFF”: Serial number will neither be displayed nor printed.

[No.] — “5-digit number”: Serial number
[How to change the number]
(1) Turn the roller, or press **IOL** switch or **VD** switch to select the digit. The number of the selected digit will be displayed in reverse image.
(2) The number increases when **PRINT** switch is pressed, and decreases when **START** switch is pressed.

“RESET”: Resets serial number to “00001”.
[How to reset]
(1) Turn the roller, or press **IOL** switch or **VD** switch to select “RESET”.
(2) Press **START** switch or **PRINT** switch.

DATE — Date and time

“01” – “31”:	Day
“JAN” – “DEC”:	Month (When “YMD” is selected for “ORDER” below, month will be displayed in numbers “1” – “12”)
“2000” – “2099”:	Year
“00” – “23”:	Hour
“00” – “59”:	Minutes

[How to change the setting]
(1) Select the item by turning roller, or by pressing **IOL** switch or **VD** switch.
(2) Number increases when **PRINT** switch is pressed, and decreases when **START** switch is pressed.

ORDER — Order of displaying the date
“YMD”: Year, month, day
“MDY”: Month, day, year
“DMY”: Day, month, year

AUTO MEASURE — The number of continuous measurements “1 / 3 / 5”

R–L MEASURE — Whether to make a series of measurements on both eyes automatically
“ON”: Left eye will automatically be measured after measuring the right eye.

"OFF": Only one eye will be measured. When this is selected, printing must be done by pressing the **PRINT** switch. When you change the setting from "ON" to "OFF" when "AUTO PRINT" is set to "ON", a message "AUTO PRINT WILL BE OFF" will be displayed and "AUTO PRINT" will automatically change to "OFF".

AUTO PRINT

Whether to automatically have the results of measuring both eyes printed out when "R–L MEASURE" is set to "ON"

"ON": Results will be printed out automatically.

"OFF": **PRINT** switch must be pressed to print out the results. When "R–L MEASURE" is set to "OFF", "AUTO PRINT" will also be set to "OFF".

Press AUTO switch to proceed page 2/3.
Press MANU. switch to return to page 3/3.
Press SET switch to return to measurement mode.

6.2 Settings for Printing and Transfer (Page: 2/3)

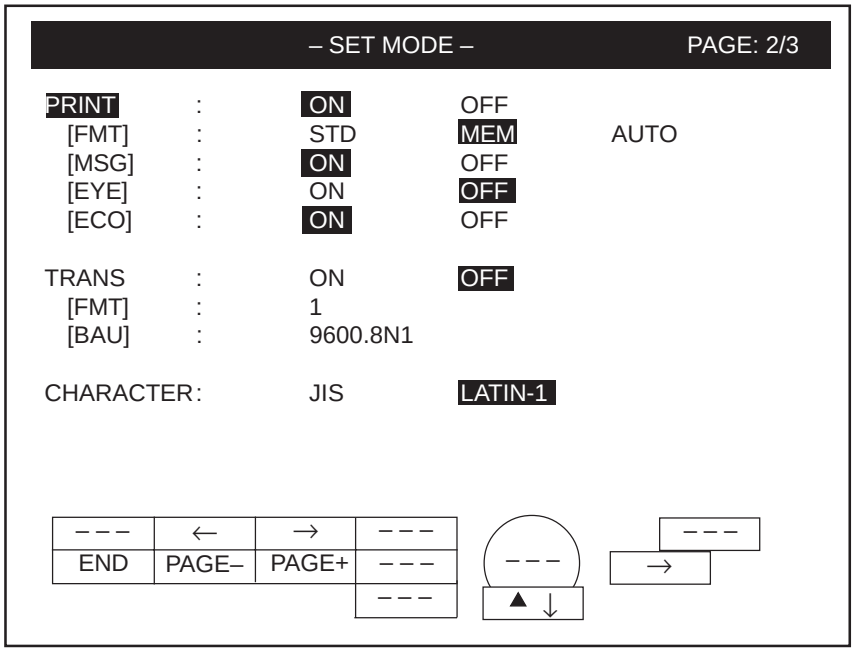

6.2.1 Basic Operation

[How to Select the Item]

Turn the roller to select the item to be changed.
The selected item will be displayed in reverse image.

[How to Change the Setting]

Press either **IOL** switch, **VD** switch, **START** switch or **PRINT** switch.
The selected setting will be displayed in reverse image.

NOTE: Some settings must be changed in a different ways. The procedure for changing those settings will be indicated under the explanation of each item.

6.2.2 Items

PRINT

Whether to print the result
"ON": Results are printed with the internal printer of the R-F10.
"OFF": Not printed.

[FMT]

Results of refractometry to be printed out.
Regardless of whether "STD" or "AUTO" is selected, data for "MEM" will be printed when **PRINT** switch is pressed for more than 2 seconds, or when measurements vary widely and the reliability of any one of the measurements is low when "AUTO PRINT" is "ON".
"STD": Standard values
"MEM": 10 newest measurements and a standard value for each eye in memory
"AUTO": In case of small dispersion of the data, the standard value is printed. Otherwise, the standard value and all data are printed.

[MSG]

Whether to print the messages entered in section 6.3
"ON": Messages are printed.
"OFF": Not printed.

[EYE]

Whether to print a sketch of eyeball and refraction diagram according to the results of refractometry
"ON": A sketch of eyeball and refraction diagram are printed.
"OFF": Not printed.

[ECO]

Reduction of printout
"ON": The size of printout will be reduced.
"OFF": Non-reduction

[How to change the setting]
Press either **START** switch or **PRINT** switch.

TRANS

Whether to transfer the measurement data to external instrument or not

NOTE: Please contact Canon representative or distributor when connecting external instrument to the R-F10.

"ON": Data is output in RS232C interface. Data that can be output are: results of refractometry, pupil distance and measurement date.
"OFF": For no transfer.

[FMT] Transfer format

NOTE: For details concerning format, please contact Canon representative or distributor.

[How to change the setting]
Press either **START** switch or **PRINT** switch.

[BAU] RS232C data transfer speed and data format

9600.8N1
9600: Transfer speed “300, 600, 1200, 2400, 4800, 9600, 19200”
8: Transfer bit “7, 8”
N: Parity “E, O, N”
1: Stop bit “1, 2”

[How to change the setting]
(1) Turn the roller or press **IOL** switch or **VD** switch to select transfer speed or transfer format.
(2) Press either **START** switch or **PRINT** switch to change the setting.

CHARACTER The type of characters displayed for entering message on page 3/3 can be selected.
“JIS”: Japanese characters will be displayed.
“LATIN-1”: Characters such as with umlaut will be displayed. For details, see the illustration of the monitor in section 6.3.

Press AUTO switch to proceed page 3/3.
Press MANU. switch to return to page 1/3.
Press SET switch to return to measurement mode.

6.3 Entering Message for Internal Printer (Page: 3/3)

Enter a message to be printed out with the result of measurement with the internal printer in this display. You can enter messages in 18 characters × 4 lines.
Message is backed up by battery, and will be retained even if power is turned OFF.

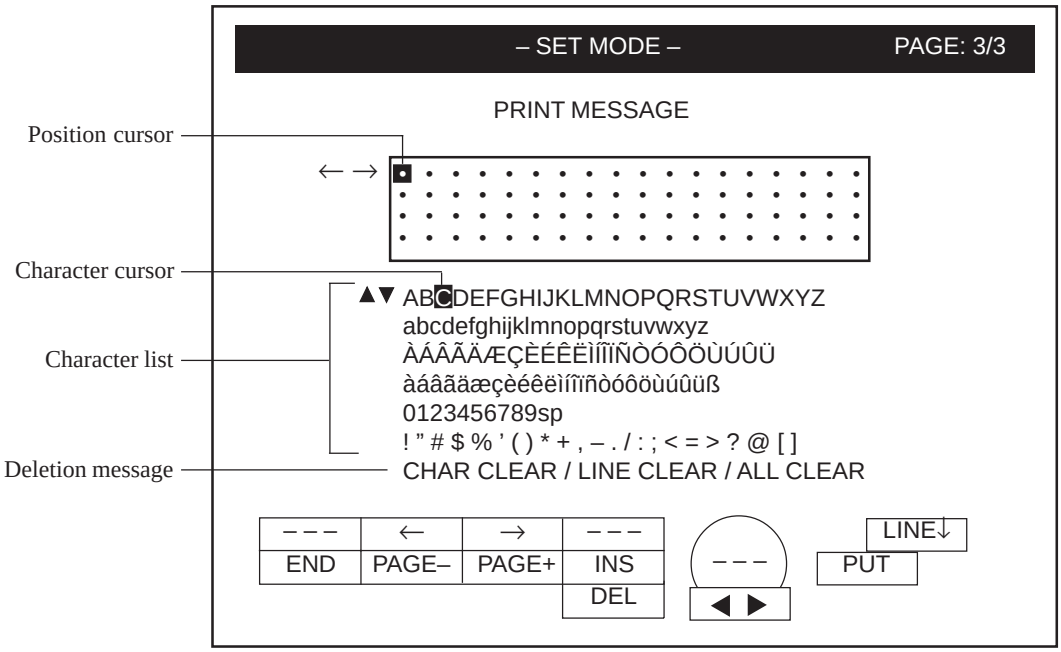

6.3.1 About the Display

Position cursor: Square in the message entering area is called a position cursor.
Input will be made at the place where the cursor is located.
Position cursor moves to left by pressing **IOL** switch, and to right by pressing **VD** switch.

Character cursor: Square in the character list or deletion message is called a character cursor.
Character being selected with character cursor will be entered.
Or, deletion operation can be selected from the deletion message with the character cursor.
Character cursor moves to right or left by turning the roller.

Character list: A list of characters that can be entered is displayed here.
Line that includes the required character can be selected by pressing **PRINT** switch. Character can be selected by turning the roller.

Deletion message: For details, see section 6.3.4.

6.3.2 How to Enter the Characters

1 Move the position cursor to the required position

Press **IOL** switch or **VD** switch.

2 Select the required character

Press **PRINT** switch to select the line that includes the required character. Then, turn the roller to select the character.

3 Enter the character

Press **START** switch.

4 Enter the whole message

Repeat the steps from 2 to 3 until the whole message is entered.

6.3.3 How to Insert

1 Move the position cursor to the required position

Press **IOL** switch or **VD** switch.

2 Insert a space

Press **CHIN REST ↑** switch
A space of one character will be inserted at the place where the cursor was.

3 Enter the character

Repeat the steps 2 and 3 in section 6.3.2

6.3.4 How to Delete

In order to delete single character and shift all the characters on the right-hand side to the left side by one space

1 Move the position cursor to the character to be deleted

Press **IOL** switch or **VD** switch.

2 Delete the character

Press **CHIN REST** ↓ switch.

In order to delete single character without shifting the remaining characters

1 Move the position cursor to the character to be deleted

Press **IOL** switch or **VD** switch.

2 Select the line “CHAR CLEAR / LINE CLEAR / ALL CLEAR”

Press **PRINT** switch.

3 Select “CHAR CLEAR”

“CHAR CLEAR” is first selected. However, if you have changed the selection, turn the roller until “CHAR CLEAR” is displayed in reverse image

4 Delete the character

Press **START** switch.

In order to delete a line

1 Move the position cursor to the line you wish to delete

Press **IOL** switch or **VD** switch.

2 Select the line “CHAR CLEAR / LINE CLEAR / ALL CLEAR”

Press **PRINT** switch.

3 Select “LINE CLEAR”

Turn the roller until “LINE CLEAR” is displayed in reverse image

4 Delete the line

Press **START** switch.
Following message will be displayed for confirmation:
“DELETE A LINE?”
If it is OK to delete the line, press **START** switch.
If you wish to cancel the deletion, press **PRINT** switch.

In order to delete the whole message

1 Select the line “CHAR CLEAR / LINE CLEAR / ALL CLEAR”

Press **PRINT** switch.

2 Select “ALL CLEAR”

Turn the roller until “ALL CLEAR” is displayed in reverse image.

3 Delete the whole message

Press **START** switch.
Following message will be displayed for confirmation:
“DELETE ALL DATA?”
If it is OK to delete the whole message, press **START** switch.
If you wish to cancel the deletion, press **PRINT** switch.

Press AUTO switch to return to page 1/3.
Press MANU. switch to return to page 2/3.
Press SET switch to return to measurement mode.

7. Daily Inspection and Maintenance

⚠ CAUTION	For safety reasons, be sure to inspect the instrument daily before using it.

7.1 Inspection

In order to ensure that the instrument is used safely and normally, please be sure to inspect the instrument before use.
If any problem is found during the inspection, please take measures indicated in this chapter.
If problem still cannot be corrected, please contact Canon representative or distributor.

⚠ WARNING	The instrument must be repaired by a qualified engineer only. If it is not repaired properly, it may cause fire, electric shock, or accident.

7.1.1 Before Turning ON the Power

⚠ WARNING	For safety reasons, be sure to turn OFF the power switch when the following inspections are going to be performed. Otherwise, it may result in electric shock.
⚠ WARNING	Clean the plug of the power cable periodically by unplugging it from the AC outlet and removing dust or dirt from the plug, its periphery and AC outlet with a dry cloth. If the cable is kept plugged in for a long time in a dusty, humid or sooty place, dust around the plug will attract moisture, and this could cause insulation failure which could result in a fire.

It is recommended that a record of the inspection be kept by copying this and the next page, or making a separate check list.

	Inspection	Result			Remedy
		Date /	Date /	Date /	
Power supply cable	Check that the power cable is not damaged or cover of cable is not torn.	Good / Bad	Good / Bad	Good / Bad	Contact Canon or distributor if there is any problem.
	Check that the power cable is inserted fully into the connector on the instrument and into the AC receptacle.	Good / Bad	Good / Bad	Good / Bad	Fully insert the cable.
Main unit	Check that the cover or parts are not damaged and not loose.	Good / Bad	Good / Bad	Good / Bad	Contact Canon or distributor if there is any problem.
	Clean the protective glass in the measurement window.	Good / Bad	Good / Bad	Good / Bad	See section 7.3.1.
	Disinfect the forehead rest.	Good / Bad	Good / Bad	Good / Bad	See section 7.3.2.
	Check that there are enough sheets of chin rest paper on the chin rest.	Good / Bad	Good / Bad	Good / Bad	Obtain paper if not enough. See section 7.4.1.
	Check that there is enough printing paper left.	Good / Bad	Good / Bad	Good / Bad	If not, replace the roll of paper. See section 7.4.2.
	Check that the monitor is clean.	Good / Bad	Good / Bad	Good / Bad	Clean the monitor. See section 7.3.3.

7.1.2 After Turning ON the Power

	Inspection	Result			Remedy
		Date /	Date /	Date /	
Main unit	Check that the READY lamp lights and measurement display on the monitor is normal.	Good / Bad	Good / Bad	Good / Bad	Contact Canon or distributor if there is any problem.
	Check that the chin rest moves up and down smoothly when CHIN REST switches are pressed.	Good / Bad	Good / Bad	Good / Bad	Contact Canon or distributor if there is any problem.
	Check that the measurement head moves up and down, right and left when the trackball is turned.	Good / Bad	Good / Bad	Good / Bad	Contact Canon or distributor if there is any problem.
	Check that the measurement head moves back and forth when the roller is turned.	Good / Bad	Good / Bad	Good / Bad	Contact Canon or distributor if there is any problem.

7.2 Before Calling a Service Person

Whenever a problem occurs or message appears on the monitor, take the countermeasures indicated below according to the cause.
If function is still not restored, contact Canon representative or distributor.

7.2.1 If Problems Such as Following Occur

Problem	Cause	Remedy
Measurements vary widely.	Eyelid or eyelashes are covering the pupil	Instruct the examinee to open the eye wider, or lift up the eyelid lightly with your fingers and measure again.
	Examinee's eye is not fixed. (Eye is moving restlessly.)	Relax the examinee and have him/her look at the eye fixation target (red roof in the scene).
	Examinee's eye is exposed to external light.	Do not expose the examinee's eye directly to bright artificial light or sunlight.
Settings in the SET mode have changed for no apparent reason. When power is turned OFF and then ON again, message "LOW BATTERY" appears on the monitor.	Voltage of battery for data backup is low.	Contact Canon or distributor for replacement.
READY lamp blinks and nothing is displayed on the monitor.	Power-saving system is functioning because no operation has been performed for over 3 minutes.	Press any switch.

7.2.2 If Message Such as Following Appears on the Monitor

If message does not disappear even after taking the countermeasures indicated in this section, contact Canon representative or distributor.
In this case, please let us know the message that is displayed.

	Message / Display	Cause	Remedy
During automatic alignment	**[1] EYE CANNOT BE FOUND PRESS START SW AGAIN**	The position of examinee's eye is off the automatic alignment range.	Use the roller and trackball to move the position of the examinee's eye on the monitor toward the center a little more and press the START switch again.
		Examinee's eye is moving restlessly.	Have the examinee look at the eye fixation target (red roof in the scene). If the eye is moving due to causes such as nystagmus, perform compulsory measurement during automatic alignment or continuous manual measurement. (See section 4.2)
		The pupil is obscured by eyelid or eyelashes.	Instruct the examinee to keep his/her eye open wide or help them open the eye widely by lifting up the upper eyelid lightly with your fingers. Then, press START switch again.
		Effect of light reflected from the surface of IOL, etc.	Display the bright dots near the center using trackball and roller. Then, press the START switch again.
		Problem in surface of exmainee's cornea.	Perform compulsory measurement during automatic alignment or perform continuous manual measurement. (See section 4.2)
		Effect of artificial light or sunlight reflected from the examinee's eye.	Do not expose the examinee's eye directly to bright artificial light or sunlight.
	[3] EYE CANNOT BE FOUND TRY IN MANUAL MODE	Automatic alignment could not be performed again although START switch was pressed after message [1].	Perform continuous manual measurement. (See section 4.2)

	Message / Display	Cause	Remedy
During automatic alignment	**[10] CANCELLED BY USER**	Alignment has been cancelled because the examiner has touched one of the switches other than the START switch, or has touched the trackball or roller.	Measure again as required.
	[20] LEFT ([21] RIGHT / [22] FRONT / [23] BACK / [24] UPPER / [25] LOWER) LIMIT CHECK POSITION OF FACE	The measurement head has reached the mechanical limit during alignment.	Check the height of the chin rest and ensure that the examinee's face is properly positioned. Then, press the START switch again.
	MOTOR ERROR 1 (2 / 3) PRESS ANY SWITCH TO RESET	Movement of measurement head has been interrupted.	Do not interrupt the movement of the measurement head such as by holding it. Press any switch to reset the measurement head.
During measure-ment	**MEAS**	Measurement is being performed.	-----
	[2] MEASUREMENT ERROR PRESS START SW AGAIN	Measurement error has occurred twice successively during automatic measurement due to eyelid or eyelashes covering the pupil.	Instruct the examinee to keep his/her eye open wide, or help them open the eye widely by lifting up the upper eyelid lightly with your fingers, and press the START switch again.
		Measurement error has occurred twice successively during automatic measurement because part of the pupil is opaque or there is a problem in surface of cornea.	Perform continuous manual measurement. (See section 4.2)
	[4] MEASUREMENT ERROR TRY IN MANUAL MODE	Automatic measurement which was performed again after message [2] has failed.	Perform continuous manual measurement . (See section 4.2)
	[11] STOPPED BY USER	The movement of measurement head has been cancelled because the exmainer has lpressed one of the switches when the measurement head was moving to the other side, or during initialization.	Press R/L switch as required.
	[12] CANCELLED BY USER	Continuous manual measurement has been cancelled because the examiner has moved the measurement head toward the other eye during measurement.	Measure again as required.

	Message / Display	Cause	Remedy
During measure-ment	**[13] CANCELLED BY USER**	Continuous manual measurement has been cancelled because the examiner has touched one of the switches other than trackball or roller.	Measure again as required.
	ERROR	Examinee has IOL implanted.	Measure with IOL switch turned ON.
		Examiner has strong irregular astigmatism or corneal disease.	Measurement is not feasible.
	+OUT	Sum of sphere and cylinder of examinee's eye is over +22D.	Measurement is not feasible.
		Protective glass in the measurement window is dirty.	Clean the glass. (See section 7.3.1)
	-OUT	Sum of SPH and CYL of exmainee's eye is over -30D.	Measurement is not feasible.
		Protective glass in the measurement window is dirty.	Clean the glass. (See section 7.3.1)
	C OUT	Astigmatism is over 10D.	Measurement is not feasible.
		Protective glass in the measurement window is dirty.	Clean the glass. (See section 7.3.1)
	#	Examinee has irregular astigmatism.	-----
	*****	Reliability of measurement is low.	Measure again.
	↓	The reliability of the data is lower than when * mark is displayed. When the reliability of all the data is low, this mark will also appear after the standard value.	Perform continuous manual measurement. (See section 4.2)
During printing with internal printer	**PRINT CANCELLED**	Printing has been cancelled by pressing one of the switches during printing.	Perform printing again as requied.
	NO PRINT DATA	Tehre is no measurement data.	Print after measurement.
	PRINT: OFF	PRINT is set to OFF in SET mode.	Set PRINT fo ON as reuiqred.
	PRINT: OFF / TRANS: OFF	Both PRINT and TRANS are set to OFF in SET mode.	Set them to ON as required.
	PRINTER LEVER IS DOWN	Printer lever is lowered.	Raise the lever.

	Message / Display	Cause	Remedy
During printing with internal printer	**NO PRINT PAPER**	There is no printing paper.	Load a roll of printing paper.
	PRINTER TOO HOT	The printer head is too hot.	Wair for about 5 minutes and try again.
	PRINTER TOO COLD	The printer head is too cold.	
During transfer	**TRANSMITTING**	Data is being transmitted.	-----
	TRANS COMPLETED	Data transfer has been completed.	-----
	NO TRANS DATA	There is no measurement data.	Transfer after performing measurement.
	TRANSMISSION CANCELLED	Transmission has been cancelled by pressing one of the switches during transfer.	Transfer again as required.
	RECEIVED BREAK CHARACTER	The instrument has received a break character from the external equipment.	Transfer again as required.
	COMMUNICATION ERROR (401)	The connected equipment is not ready yet.	Prepare the external equipment.
	COMMUNICATION ERROR (402) - (410)	Format set in SET mode and that of the external equipment do not match.	Change the settings as required.
Error in the system	**LOST BACKUP DATA**	Problem has occurred in the instrument.	Press START switch to erase the message. Although you can continue the measurement for time being, the data cannot be backed up. Immediately as Canon or distributor for replacement of battery.
	LOST DATE DATA		
	LOW BATTERY	Voltage of the battery for data backup is low.	Press START switch to erase the message. Although you can continue the measurement for the time being, the data that are backed up will be lost in time. Immediately ask Canon or distributor for replacement.
	SYSTEM ERROR (xxx)	Problem has occurred in the instrument.	Turn OFF the power switch and turn it ON again after about 10 seconds.
	ILLEGAL CODE ERROR		
	ILLEGAL SLOT ERROR		
	CPU ADDRESS ERROR		
	DMAC ADDRESS ERROR		

* “xxx” indicates a three-digit number.

7.3 Cleaning and Disinfection

7.3.1 Protective Glass in Measurement Window

Clean the protective glass in the measurement window as indicated below when dust is on it, or if it is stained.

1 Blow off dust

Remove the brush from the blower brush and blow off the dust on the protective glass.

NOTE: If the protective glass is wiped when there is dust on it, the surface will be scratched.

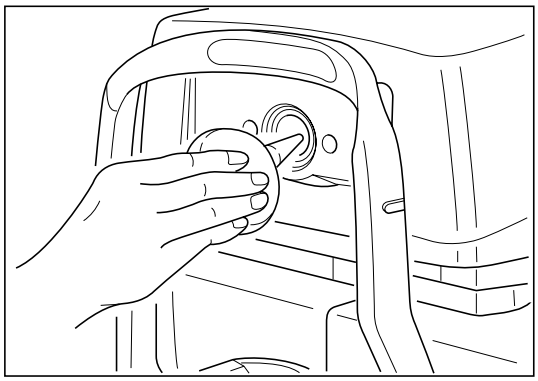

2 Wipe the protective glass

Wipe the protective glass lightly with sterile gauze or non treated lens paper, on which you can put some lens cleaner. Please consult Canon representative or distributor about lens cleaners that can be used.
Change the paper and wipe the lens several times until there is no lens cleaner left on the surface.

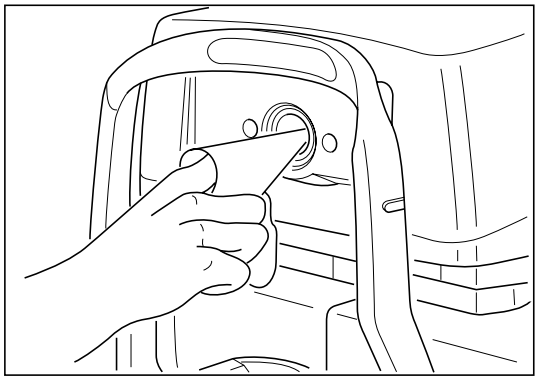

NOTE: Do not wipe the protective glass with disinfecting alcohol, lens cleaner for glasses, or cleaning paper containing silicone as the surface may be damaged or stained. Also, if the glass is soaked excessively with lens cleaner, the surface will be stained.

7.3.2 Forehead Rest

⚠ CAUTION	Wipe the forehead rest with ethanol or glutaraldehyde solution to disinfect it each time a different examinee uses it, in order to prevent infection. Please contact a specialist for the procedure for disinfection. If you are using disinfectant other than those specified above, or if you are mixing another disinfectant with ethanol, please also consult a specialist, because they may harm the forehead rest.

7.3.3 Cover, Monitor and Roller

Clean the cover and monitor if they are dirty.

⚠ WARNING	When the instrument is going to be cleaned, be sure to turn OFF the power switch and unplug the power cable from the AC outlet. Never use alcohol, benzine, thinner or any other flammable cleaning agents. Otherwise, fire or electric shock may result.

1 Turn OFF the power

Turn OFF the power switch and disconnect the power cable from AC receptacle.

2 Wipe the cover and monitor

(1) Wipe the cover and monitor with a piece of soft cloth soaked in neutral detergent for plastics diluted in water and wrung dry.

(2) Wipe the cover with a piece of cloth soaked in water and wrung dry whenever neutral detergent has been used.

7.3.4 Trackball

Clean the trackball if it does not rotate smoothly.

(1) Turn the trackball cover in counter-clockwise direction to remove it.

NOTE: Trackball cover will be removed with the trackball. Be careful not to hit or drop the trackball cover when the trackball is attached to it, as the trackball will fall out easily.

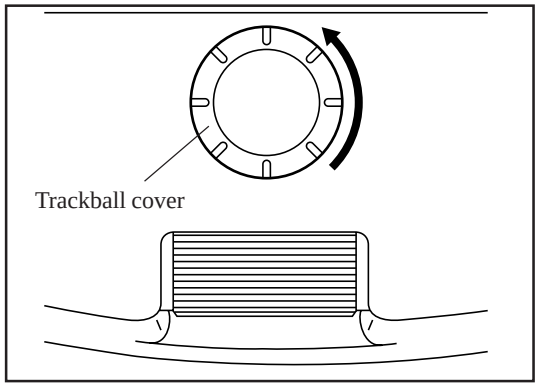

(2) Remove the trackball from the claws of the trackball cover.

(3) Wash the trackball in water.

(4) There are three rollers inside the aperture where the trackball was placed.
Wipe these rollers and the back of the trackball cover with a piece of cloth soaked in water and wrung dry.

(5) After the trackball and other parts that have been wiped are dry, return the trackball to the trackball cover.

(6) Return the trackball cover by aligning the longer claw of the cover with the arrow indicated on the edge of the aperture.

NOTE: Cover will not fit into the hole unless the longer claw is properly aligned with the arrow.

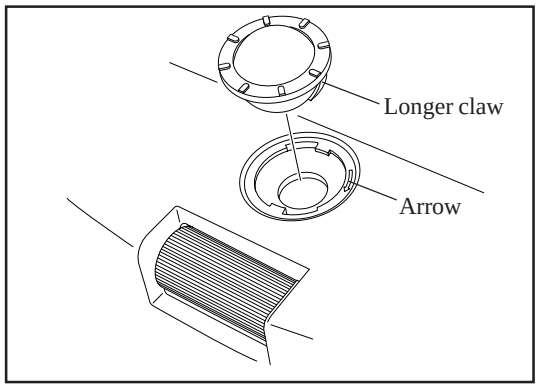

(7) Turn the trackball cover in clockwise direction until it stops.

7.4 Replacement

Please refer to “7.5 Expendable Parts List” for ordering chin rest paper and printing paper.

7.4.1 Chin Rest Paper

NOTE: When chin rest paper is not going to be used, disinfect the chin rest in the same ways as disinfecting the forehead rest each time the examinee changes.

1 Pull out the two pins on the chin rest

2 Insert the pins into the holes on the chin rest paper

Maximum of 100 sheets of paper can be attached.

3 Replace them in the chin rest

NOTE: Insert the pins straight into the holes.

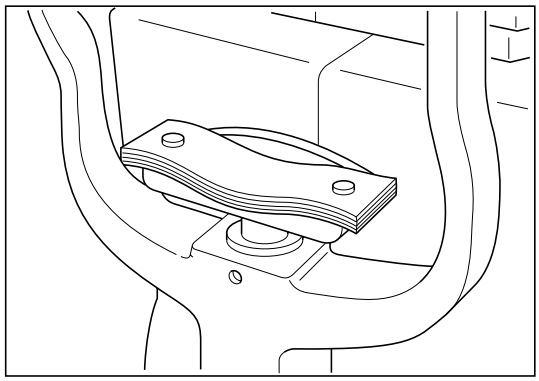

7.4.2 Printing Paper

Replace the roll of printing paper as soon as possible after the red line appears on the paper.

1 Open the printer cover

Cut off the paper that has been fed through the printer and pull it out. Pull the top part toward you.

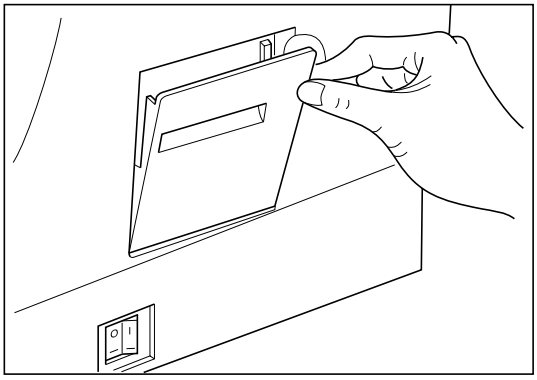

2 Lower the lever

Lower the lever on the right hand side.

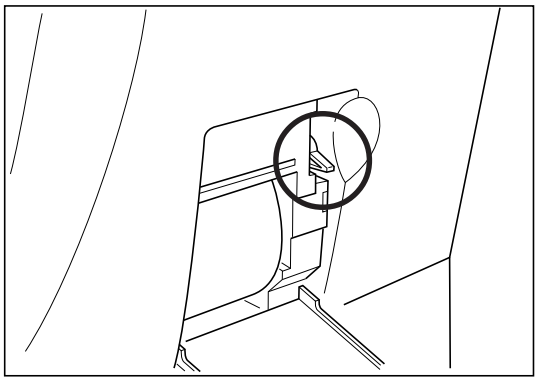

3 Remove the old roll of paper

Remove the old roll of paper together with the shaft and take the shaft out of the roll

4 Insert the shaft into a new roll

5 Load the roll of paper

Load the roll of paper into the printer as illustrated.

NOTE: Be sure to check that the direction of roll is the same as shown in the illustration.

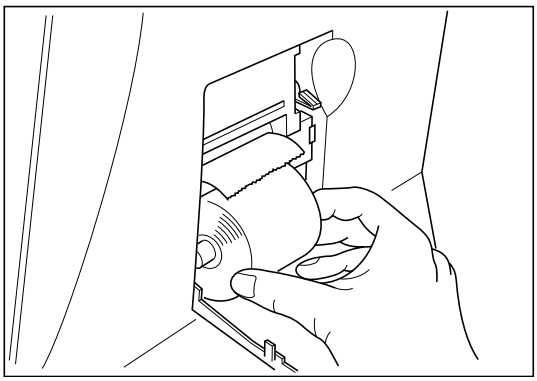

6 Raise the lever

7 Turn ON the power

Turn ON the power of the R-F10.

8 Insert the end of paper into the slot

Insert the end of paper into the slot in the printer.

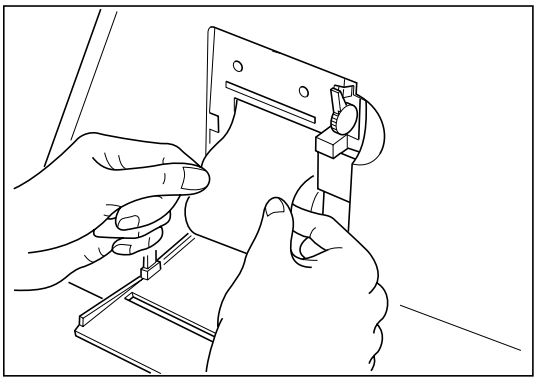

9 The paper will automatically come out

If the power is ON, the end of paper will automatically come out from the slot in the front.

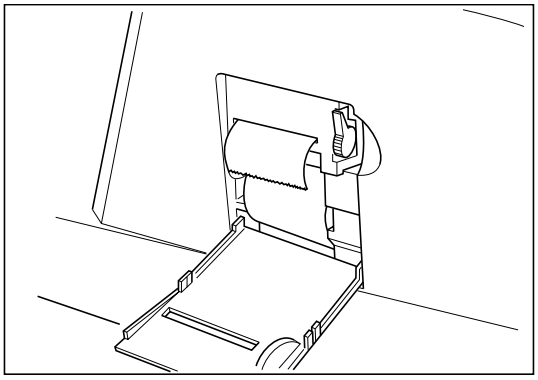

NOTES: 1. If the edge of paper is creased, it may not feed through printer properly. In this case, pull out the paper, neatly cut off the end of paper and reload.
2. If the paper is fed through the printer aslant, it may cause paper jam. Lower the lever and straighten the paper. Then, raise the lever again.

10 Close the cover

⚠CAUTION	Do not touch the cutter for the printing paper. Otherwise, fingers may be cut.

Pull out the edge of paper from the printer cover slot and close the cover.

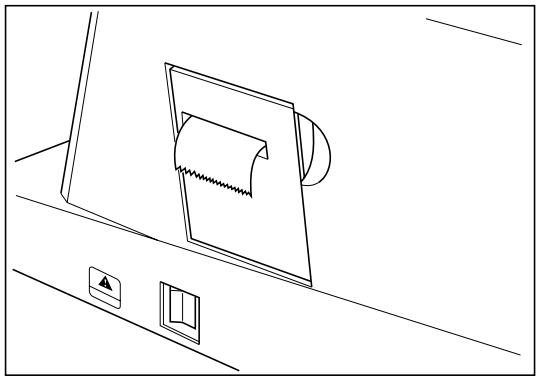

7.5 Expendable Parts List

Please contact Canon representative or distributor for purchasing the following parts:

Name	Reference Number	Note
Chin rest paper	BA3-0151	500 sheets/set
Printing paper	BH4-8143	Thermal printing paper. 10 rolls/set. (Width: 58 mm, Length: 30 m, Outside diameter of the roll: 52 mm, Inside diameter of the core: 12 mm)

8. Installation

8.1 Installation

⚠ WARNING	Only operate the instrument with the type of power supply indicated on the rating plate. Otherwise, it may result in fire or electric shock.
⚠ WARNING	Be sure to disconnect/connect the cables as indicated in this manual. The unit weighs 21 kg, so bear in mind that it may tip over if proper care is not taken. Also, do not handle the cables with wet hands. Otherwise, you may get an electric shock that may result in death or serious injury.
⚠ CAUTION	This instrument is shipped with a grounding type (three-core) power cable. To reduce the risk of electric shock, always plug the cable into a grounded power outlet.

NOTES:
1. *Do not install the instrument in a location with the conditions listed on page (2).*
2. *Do not remove the cover for the RS232C connector on the bottom of the R-F10. Please contact Canon representative or distributor when connecting any instrument.*

1 Turn OFF the power switch

2 Expose the bottom of the instrument

Lay the instrument on its side on a table as illustrated so the bottom can be seen.

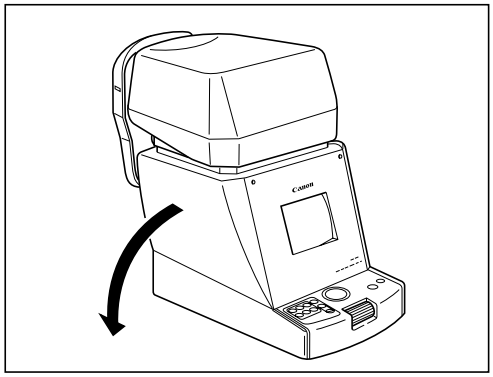

NOTES:
1. *The measurement head is positioned at the center when the instrument is shipped from Canon. However, if it is positioned either on the right or left side, lay the instrument on the side opposite the side from which the measurement head is protruding. Otherwise, the measurement head will be damaged.*

2. *Do not lay the instrument on its side with the power turned ON. Otherwise, the instrument may malfunction.*

3 Connect the power supply cable to the instrument

Hold the instrument firmly with your hand and securely connect the power supply cable to the power supply connector on the bottom of the instrument (→ section 3.2).

4 Set up the instrument

5 Connect the power supply cable to an AC outlet

6 Place the chin rest paper on the chin rest

→ Section 7.4.1

7 Load the printing paper into the printer

→ Section 7.4.2

8 Customize the settings as required

Change the order of measurement modes and the settings concerning the measurement as required (→ chapter 6).

9 If you are using external equipment

Please contact Canon representative or distributor.

8.2 Precautions when Moving the Instrument

⚠ WARNING	When the instrument is going to be moved, be sure to move the measurement head to the center, turn OFF the power switch, unplug the power cable from the AC outlet, and disconnect other cables. Otherwise, the cable may be damaged, which may result in fire or electric shock. Also, when the instrument is going to be carried, support the bottom of the instrument and hold it horizontally. Do not hold it by the face rest or other parts as they may come off, resulting in injury.
⚠ WARNING	Do not hit or drop the instrument. The instrument may be damaged if it receives a strong jolt, which may result in fire or electric shock if the instrument is used without it being repaired.

NOTE: When the instrument is going to be transported by automobile, etc., it must be protected against vibration and shocks. Contact Canon representative or distributor for advice on the procedure for packing it.

1 Move the measurement head to the center

Turn ON the power while pressing the **START** switch. Release the **START** switch when you hear a beeping sound.

2 Turn OFF the power

Turn OFF the power switch.

3 Disconnect the cables

Lay the instrument in the same position as when connecting the power cable (→ section 8.1). After disconnecting all the cables, set the instrument upright again.

4 Carrying the instrument

Support the instrument by holding the sides at the base.

9. Service Information

Repair

If problem cannot be solved even after taking the measures indicated in sections 7.1 and 7.2, contact Canon representative or distributor for repair.
Please refer to the rating plate and let us have the following information:

Name of the instrument: R-F10
Body number: 6-digit number indicated on the rating plate.
Phenomenon: In detail.

Limit for Supplying Performance Parts for Repair

Performance parts* of this product will be stocked for eight years after discontinuation of production, to allow for repair.
* Parts required to maintain the functioning of the product.

Expendable Parts Replaced by Service Person

Following parts are apt to become worn out or to deteriorate due to the characteristics of the material or structure.
These parts cannot be replaced by the user.
If these parts are found to be worn out or to have deteriorated during daily inspection or use, contact Canon representative or distributor for repair.
• Lamp for illuminating eye fixation target
• Backup batteries for the clock and data
• Cathode-ray tube in the monitor

Disposal of the Instrument

⚠ CAUTION	This instrument incorporates a lithium battery, which may pollute the environment if the instrument is abandoned. Please ask a professional waste disposal company to handle disposal, or contact Canon representative or distributor before disposing of the instrument.

10. Specifications

Purpose:	Measurement of refractive power of human eye
Measurement:	
Vertex distance	0, 12, 13.5 mm
Measurable range	
Sphere power	-30.00 to +22.00 D (at vertex distance of 12 mm) (Increments selectable between 0.12 and 0.25 D)
Cylinder power	0.00 to ±10.00 D (Increments selectable between 0.12 and 0.25 D)
Axis	1 to 180° (Increments: 1°)
Pupil distance	Max. 85 mm (Increments: 1 mm)
Cylinder form	+, –, +/-
Pupil size required	2.5 mm diameter
Internal printer:	Uses thermal line printer.
Data output:	In conformity with RS232C
Monitor:	5-inch monochrome monitor
Environmental requirements:	
Operation	Temperature: 10 to 40 °C Humidity: 30 to 85 %RH
Storage and Transportation	Temperature: -10 to 55 °C Humidity: 10 to 95 %RH Atmospheric pressure: 700 to 1060 hPa
Power supply:	100 – 240 VAC, 50/60 Hz, 0.8 – 0.4 A
Power consumption:	80 VA
Dimensions:	280 (W) x 520 (L) x 470 (H) mm
Mass:	Approximately 21 kg

NOTE: According to the International System of Units, 1 D is 1 m^{-1}.

11. Components

R-F10 main unit 1

Power supply cable 1

Chin rest paper ..... 100 sheets

Printing paper ..... 2 rolls

Dust cover 1

Blower brush 1

Optional Accessories

Chin rest paper (500 sheets)
Printing paper (10 rolls)
Motorized table CO-MT

This page has been left intentionally blank.

Canon

CANON INC. Medical Equipment Group
20-2 Kiyohara-Kogyodanchi, Utsunomiyashi, Tochigiken, Japan
Telephone: (81)-28-667-5711

CANON MEDICAL SYSTEMS Eye Care Systems Department
15955 Alton Parkway, Irvine, CA 92618, U.S.A.
Telephone: (1)-949-753-4162

CANON EUROPA N.V. Medical Products Division
Bovenkerkerweg 59-61, P. O. Box 2262, 1180 EG Amstelveen, The Netherlands
Telephone: (31)-20-545-8926

CANON SINGAPORE PTE. LTD. Medical Equipment Department
1 Harbour Front Avenue, #04-01 Keppel Bay Tower, Singapore 098632
Telephone: (65)-6799-8888

CANON AUSTRALIA PTY. LTD. Optical Products Division
1 Thomas Holt Drive, North Ryde, Sydney, N. S. W. 2113, Australia
Telephone: (61)-2-9805-2000

PUB. L-IE-5115L 0000P0.000 Printed in Japan